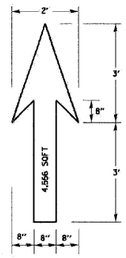

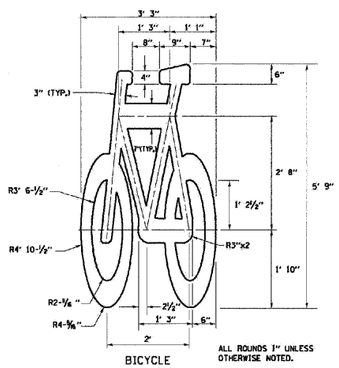

BICYCLE LANE SYMBOL

ALL ROUNDS 1" UNLESS OTHERWISE NOTED.

NOTE:

1.) FOR BIKE LANE SYMBOLS ONLY, USE PRE-FORMED THERMOPLASTIC WITH A MINIMUM THICKNESS OF 90 MILS, MINIMUM SKID RESISTANCE VALUE OF 60 BPN, & A MINIMUM INDEX OF REFRACTION OF 1.50.

2.) THE RESIDENT ENGINEER SHALL CONTACT MR. BEN GOMBERG AT 312-744-8093 AT LEAST ONE CALENDAR WEEK PRIOR TO INSTALLING BIKE LANE SYMBOLS.

TYPICAL BIKE LANE SYMBOLS
DRAWING #28

DRAWING #29

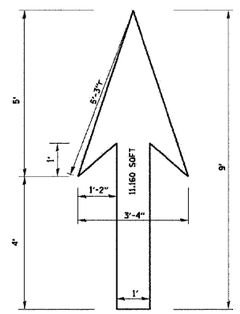

DRAWING #30

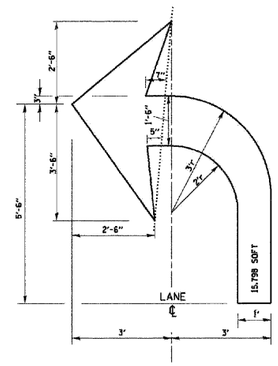

DRAWING #31

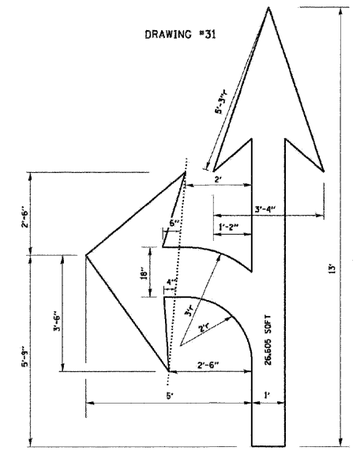

DRAWING #32

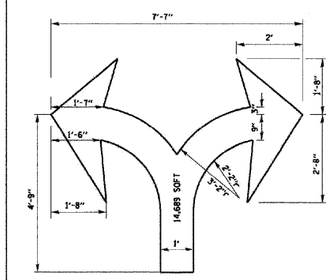

DRAWING #33

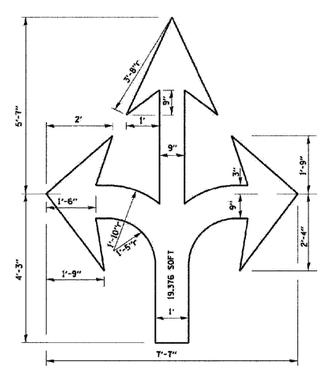

DRAWING #34

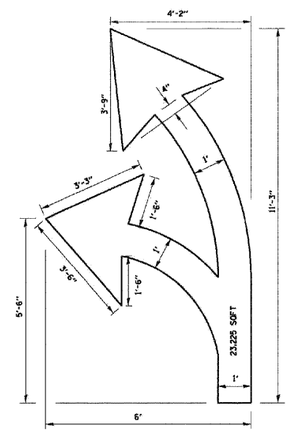

DRAWING #35

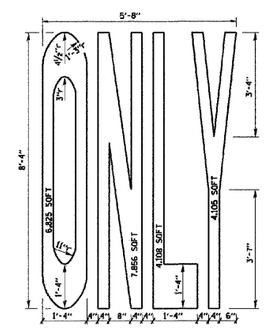

NOTE:

ALL MARKINGS SHALL BE SOLID WHITE UNLESS OTHERWISE NOTED IN THE PLANS

CITY OF CHICAGO
TYPICAL PAVEMENT MARKINGS

FILE NAME = ...\0803\W018\Chicago\Details.dgn	USER NAME = Plotted by Administrator	DESIGNED - ___	REVISED - ___	STATE OF ILLINOIS DEPARTMENT OF TRANSPORTATION	DISTRICT ONE DETAIL SHEETS COLUMBUS DRIVE FROM 87TH STREET TO WESTERN AVENUE	F.A.U. RTE.	SECTION	COUNTY	TOTAL SHEETS	SHEET NO.
		DRAWN - ___	REVISED - ___			3578	3178 RS-2	COOK	27	26
	PLOT SCALE = 25.0000 ' / IN.	CHECKED - ___	REVISED - ___					CONTRACT NO. 60G82		
	PLOT DATE = 4/21/2009	DATE - 4/2009	REVISED - ___		SCALE: NONE / SHEET NO. 17 OF 18 SHEETS / STA. ___ TO STA. ___	FED. ROAD DIST. NO. _	ILLINOIS	FED. AID PROJECT		