FAI ROUTE	SECTION	COUNTY	TOTAL SHEETS	SHEET NO
70	*	MADISON	420	44

STA. 1356+00 TO STA. 1363+50

CONTRACT NO.: 76709

* 60-10K-1, 60-10HB

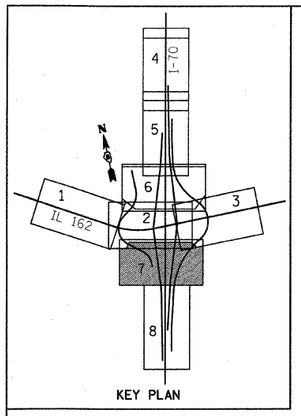

KEY PLAN

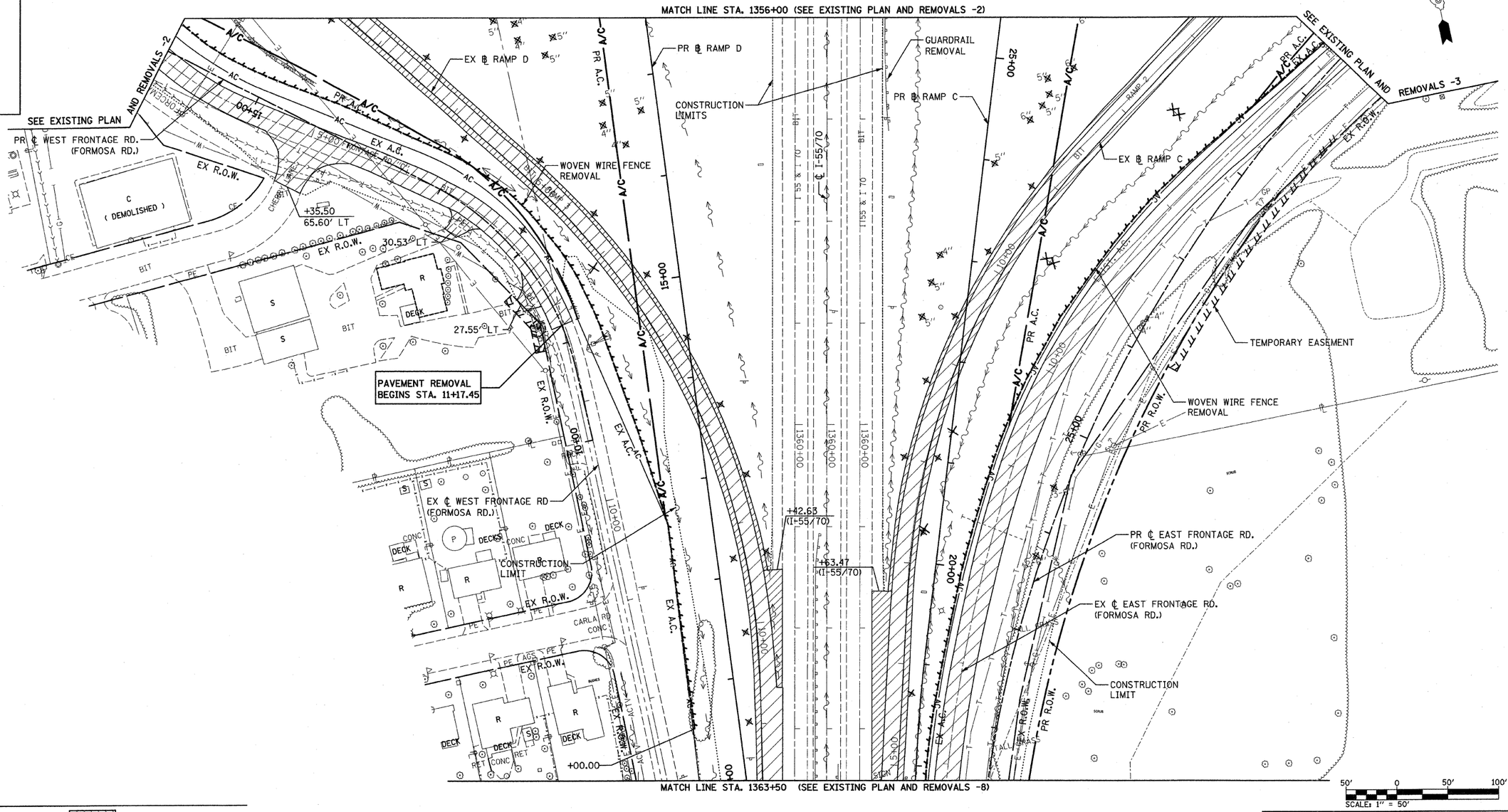

LEGEND

PAVED SHOULDER REMOVAL	DRIVEWAY PAVEMENT REMOVAL
MEDIAN REMOVAL	TREE REMOVAL
PAVEMENT REMOVAL	TREE TRUNK PROTECTION
HOT-MIX ASPHALT SURFACE REMOVAL	ITEM TO BE REMOVED
	DELINEATOR REMOVAL
	TRAFFIC SIGN REMOVAL

NOTES:

1. SEE DRAINAGE PLAN SHEETS FOR EXISTING PIPE, CULVERTS AND STRUCTURE REMOVALS.
2. DRIVEWAY STATION OFFSETS ARE MEASURED FROM THE PROPOSED CENTERLINE.

REVISIONS	
NAME	DATE

ILLINOIS DEPARTMENT OF TRANSPORTATION

EXISTING PLAN AND REMOVALS -7

FAI ROUTE 70
SECTION 60-10K-1, 60-10HB
MADISON COUNTY

DRAWN BY: GRH

PLOT DATE: *DATE-TIME*

PLAN NOTE BOOK NO. SURVEYED PLOTTED ALIGNMENT CHECKED RT. OF WAY CHECKED CADD FILE NAME BY DATE

DGN-SPEC
*REF- 236crm01.dgn
*REF- 236ctp01.dgn
*REF- 236crw01.dgn
*REF- 236cal01.dgn
*REF- 236cao01.dgn
*REF- 236cut01.dgn
*REF- keyplan ex r.dgn
*REF- pbord.dgn