FAI ROUTE	SECTION	COUNTY	TOTAL SHEETS	SHEET NO
70	•	MADISON	420	98
STA. 1325+00		TO STA. 1340+00		
CONTRACT NO. 76709				
• 60-10K-1, 60-10HB				

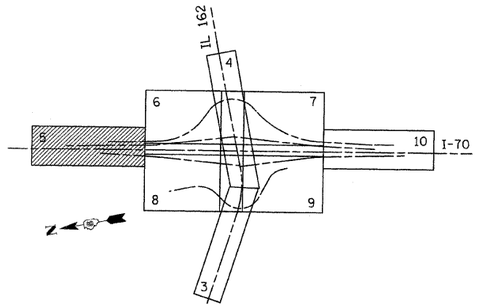

KEY PLAN

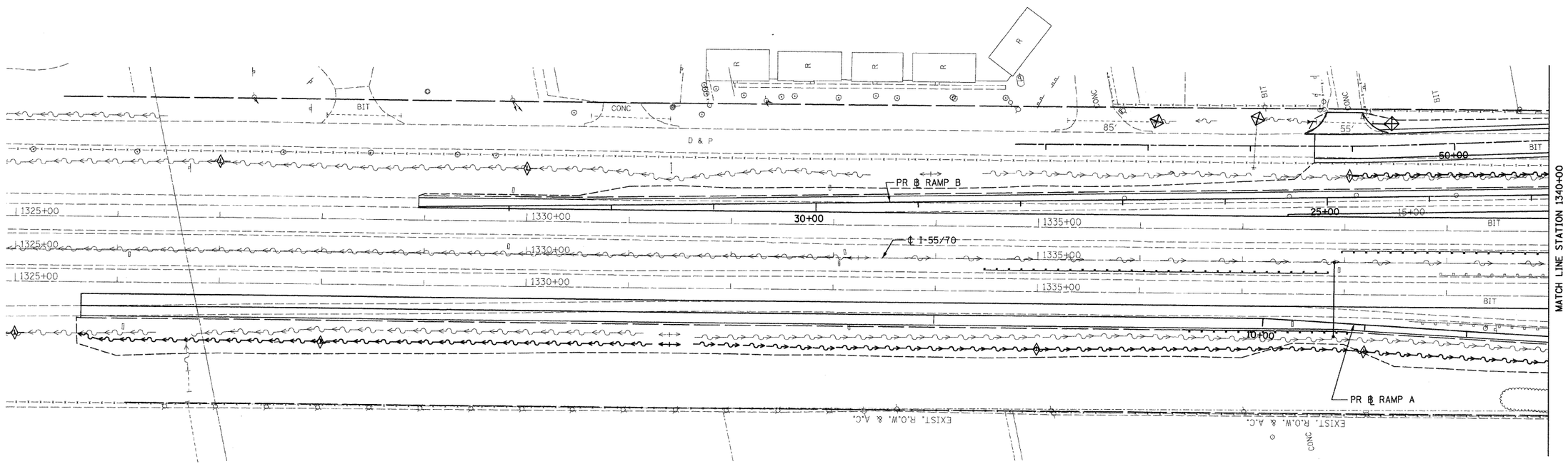

NOTES:

1. FOR DRAINAGE INFORMATION, SEE DRAINAGE PLANS.
2. PERIMETER EROSION BARRIER IS LOCATED ON TEMPORARY EASEMENT/PERMANENT EASEMENT/R.O.W. LINE, AS SHOWN ON THE PLANS.
3. FOR PERMANENT EROSION CONTROL INFORMATION, SEE SEEDING PLANS.
4. FOR EROSION CONTROL DURING STAGED CONSTRUCTION, SEE EROSION CONTROL AND TEMPORARY DRAINAGE PLAN.

LEGEND

- TEMPORARY DITCH CHECK
- EROSION CONTROL BLANKET
- PERIMETER EROSION BARRIER
- INLET AND PIPE PROTECTION

50' 0 50' 100'
SCALE: 1" = 50'

REVISIONS	
NAME	DATE

ILLINOIS DEPARTMENT OF TRANSPORTATION
STORM WATER POLLUTION PREVENTION PLAN - 5

FAI ROUTE 70
SECTION 60-10K-1, 60-10HB
MADISON COUNTY

DRAWN BY: GRH

PLOT DATE: •DATE-TIME•

PLAN
SURVEYED
PLOTTED
ALIGNMENT CHECKED
RT. OF WAY CHECKED
PROP. ILL. LINE
NOTE BOOK NO.
BY
DATE

•DATE-TIME•
•USER-NAME•
•REF- 236cover01.dgn
•REF- 236ctp01.dgn
•REF- 236cdt01.dgn
•REF- 236cdt02.dgn
•REF- 236cu101.dgn
•REF- 236cn201.dgn
•REF- 236cr401.dgn