FAP ROUTE	SECTION	COUNTY	TOTAL SHEETS	SHEET NO
70	60-10 (K-1,HB)	MADISON	420	188
STA.		TO STA.		
CONTRACT NO.: 76709				

WIRING LEGEND	
4	2#4 XLP, 1#4 XLP G 1.OP
6	2#6 XLP, 1#6 XLP G 1.OP
6.1	2#6 XLP, 1#6 XLP G 1.OP ATTACHED TO STRUCTURE, 1 " DIA.
10	2#10 XLP, 1#10 XLP G 0.75P
10.1	2#10 XLP-USE, 1#10 XLP G IN COUNDUIT, ATTACHED TO STRUCTURE, 1 " DIA.
X	(1) 400 WATT FIXTURE; POLE MTD.
X 5	(5) 750 WATT FIXTURES; HIGH MAST
X 3	(3) 750 WATT FIXTURES; HIGH MAST
X	(1) 150 WATT FIXTURE; UNDERPASS
S1	(2) 150 WATT FIXTURES; SIGN LIGHTING
S2	(3) 150 WATT FIXTURES; SIGN LIGHTING

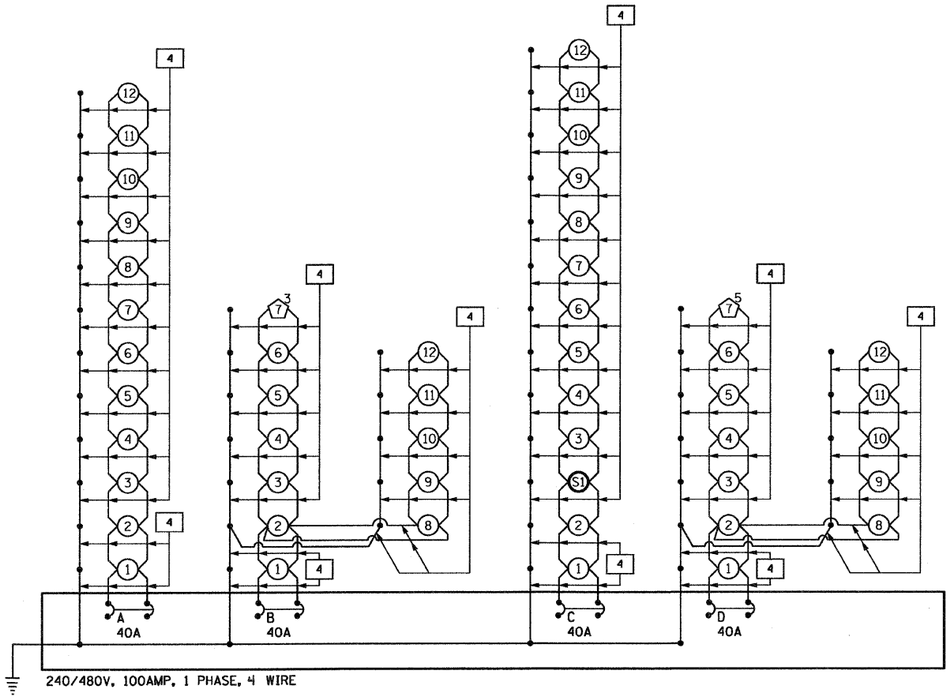

LIGHTING CONTROLLER "N" (IDOT)

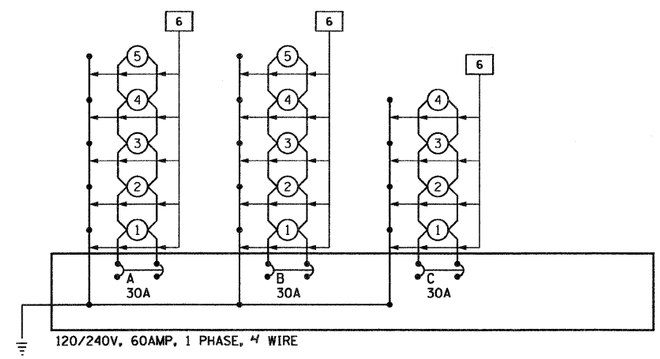

LIGHTING CONTROLLER "W" (CITY OF TROY)

CONTROLLER "N" 480 VOLT, 1 P (IDOT)	
CIRCUIT	WATTS
A	5,940
B	8,145
C	7,005
D	9,945
TOTAL	31,035

CONTROLLER "S" 480 VOLT, 1 P (IDOT)	
CIRCUIT	WATTS
A	5,025
B	10,895
C	4,950
D	5,520
TOTAL	26,390

CONTROLLER "W" 240 VOLT, 1 P (CITY OF TROY)	
CIRCUIT	WATTS
A	2,475
B	2,475
C	1,980
D	-
TOTAL	6,390

CONTROLLER "E" 240 VOLT, 1 P (CITY OF TROY)	
CIRCUIT	WATTS
A	2,475
B	2,970
C	2,475
D	-
TOTAL	7,920

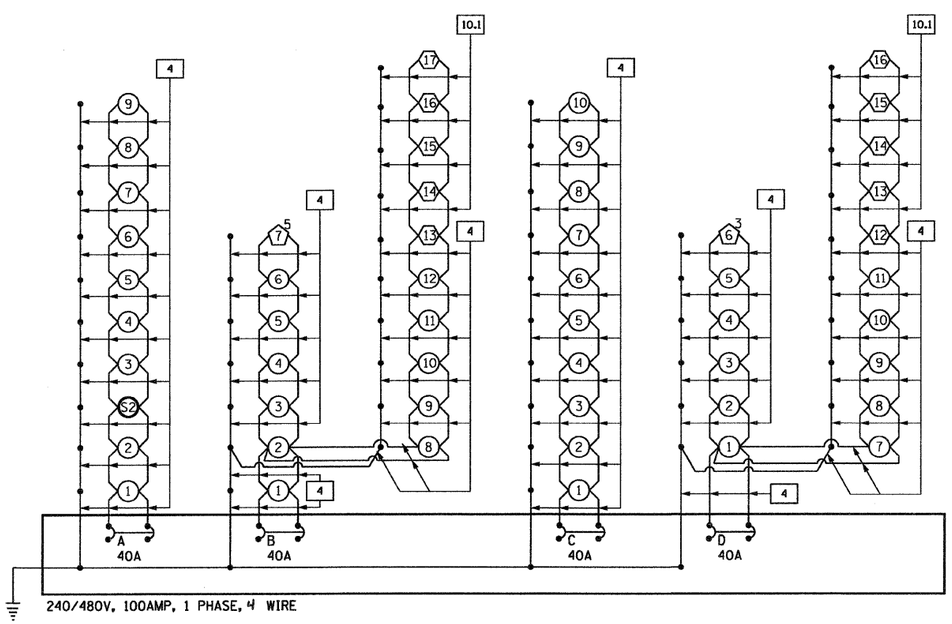

LIGHTING CONTROLLER "S" (IDOT)

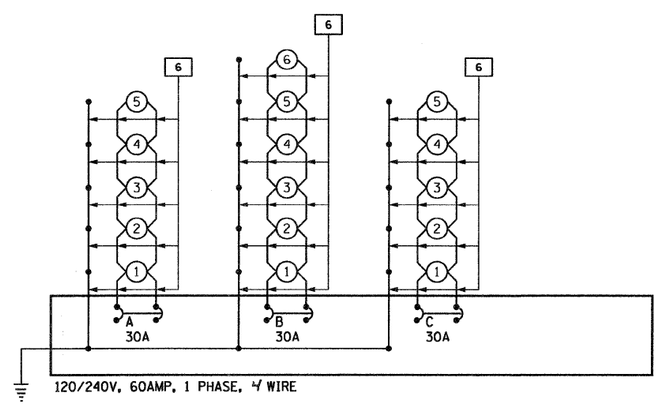

LIGHTING CONTROLLER "E" (CITY OF TROY)

LT-11

REVISIONS	
NAME	DATE

ILLINOIS DEPARTMENT OF TRANSPORTATION

PROPOSED ROADWAY LIGHTING WIRING DIAGRAMS

FAI ROUTE 70
SECTION 60-10K-1, 60-10HB
MADISON COUNTY

DRAWN BY: RPJ CHECKED BY: A. OSHANA, P.E.

PLAN	BY	DATE
SURVEYED		
PLOTTED		
ALIGNMENT CHECKED		
RT. OF WAY CHECKED		
ADD'L FILE NAME		
NOTE BOOK NO. -		

XXXXX.XXX - IDOT IL 162 over I-55.70 revisions
236-LT-11 - Wiring Diagrams.dgn
1/28/2009
1:10:36 PM
Robert Swanson