| F.A.I. RTE. | SECTION | COUNTY | TOTAL SHEETS | SHEET NO. |
|---|---|---|---|---|
| 70 | * | MADISON | 420 | 207 |
| STA. | TO STA. | | | |
| FED. ROAD DIST. NO. | ILLINOIS | FED. AID PROJECT | | |

* 60-10K-1, 60-10HB CONTRACT NO. 76709

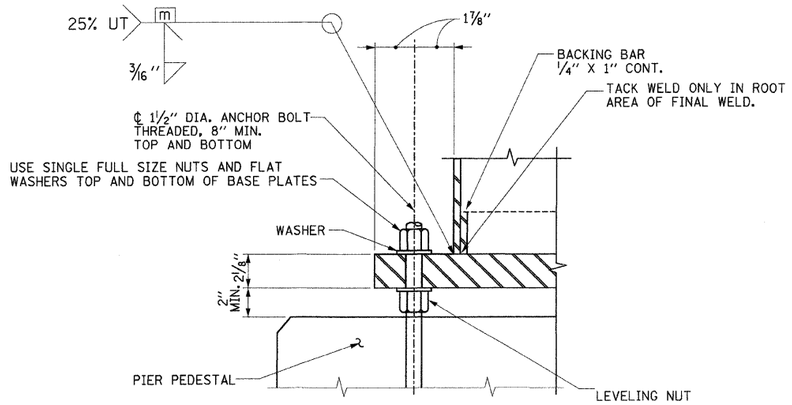


DETAIL B

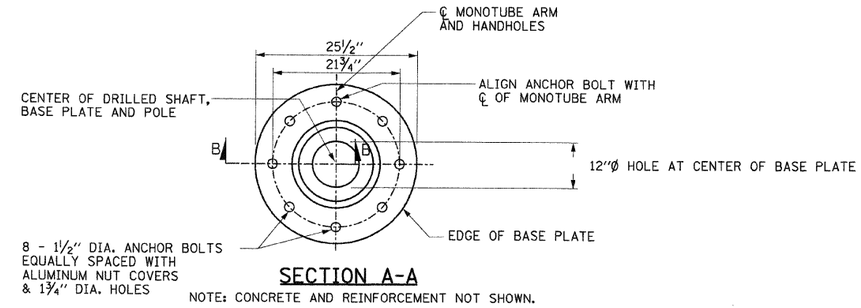


SECTION A-A

NOTE: CONCRETE AND REINFORCEMENT NOT SHOWN.

* ANCHOR BOLT GROUP LOCATIONS MAY BE ±1/2" IN THE DIRECTION OF THE SPAN.

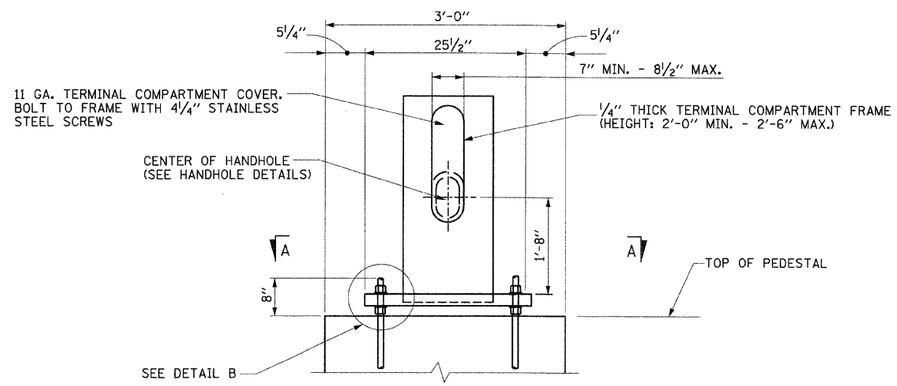


MONOTUBE BASE PLATE AND ANCHORAGE ELEVATION

SIGN STRUCTURE NUMBER
8M060I055R018.0

SHT. 4 OF 4

STV Incorporated
Engineers/Architects/Planners/Construction Managers
200 W. Monroe Street, Suite 1650
Chicago, IL 60606-5015
312/553-0655, FAX 312/553-0661

| REVISIONS | |
|---|---|
| NAME | DATE |
| | |
| | |
| | |
| | |
| | |
| | |
| | |
| | |
| | |
| | |

ILLINOIS DEPARTMENT OF TRANSPORTATION
IL ROUTE 162 OVER I-55/70 IN TROY
F.A.I ROUTE 70 SECTION 60-10K-1, 60-10HB
MADISON COUNTY STATION 499+48.35
STRUCTURE NO. 060-0338
MONOTUBE SPAN STRUCTURE
BASE PLATE & ARM
CONNECTION DETAILS

DESIGNED: JAN DRAWN: HJB
DATE: 4/06 CHECKED: TO CHECKED: JAN