06-12-2020 LETTING ITEM 039

F.A.I. RTE.	SECTION	COUNTY	TOTAL SHEETS	SHEET NO.
57	D3 I-57 PP 2020-11	IROQUOIS	11	1
	ILLINOIS	CONTRACT NO. 66K90		

STATE OF ILLINOIS
DEPARTMENT OF TRANSPORTATION

INDEX

1	COVER SHEET
2	GENERAL NOTES
3	SUMMARY OF QUANTITIES
4	TYPICAL SECTIONS
5-7	SCHEDULES
8-11	DETAILS

LIST OF ILLINOIS DOT HIGHWAY STANDARDS

000001-07	STANDARD SYMBOLS, ABBREVIATIONS AND PATTERNS
001001-02	AREAS OF REINFORCEMENT BARS
001006	DECIMAL OF AN INCH AND OF A FOOT
420001-09	PAVEMENT JOINTS
701101-05	OFF-ROAD OPERATIONS, MULTILANE, 15' (4.5 m) TO 24" (600 mm) FROM PAVEMENT EDGE
701106-02	OFF-ROAD OPERATIONS, MULTILANE, MORE THAN 15' (4.5 m) AWAY
701400-09	APPROACH TO LANE CLOSURE, FREEWAY/EXPRESSWAY
701401-12	LANE CLOSURE, FREEWAY/EXPRESSWAY
701411-09	LANE CLOSURE, MULTILANE, AT ENTRANCE OR EXIT RAMP FOR SPEEDS ≥ 45 MPH
701426-09	LANE CLOSURE, MULTILANE INTERMITTENT OR MOVING OPERATION, FOR SPEEDS ≥ 45 MPH
701428-01	TRAFFIC CONTROL, SETUP AND REMOVAL, FREEWAY/EXPRESSWAY
701901-08	TRAFFIC CONTROL DEVICES

PROPOSED HIGHWAY PLANS

FAI ROUTE 57 (I-57)
SECTION D3 I-57 PP 2020-11
PROJECT _____
PAVEMENT PATCHING
IROQUOIS COUNTY

C-93-067-20

D-93-028-20

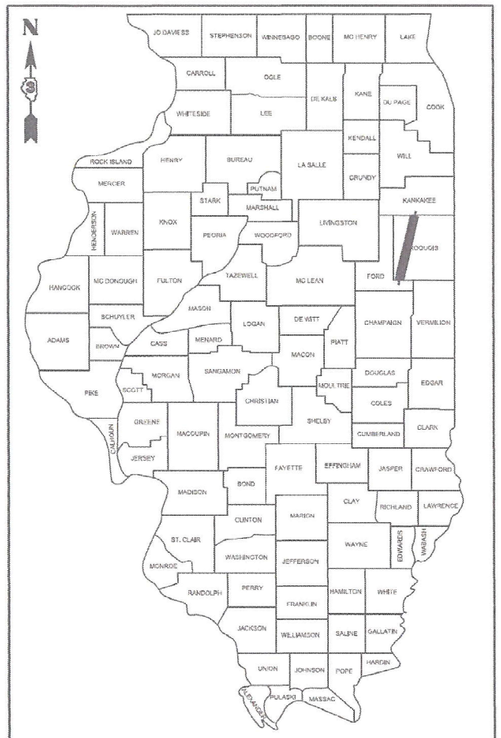

LOCATION OF SECTION INDICATED THUS: -

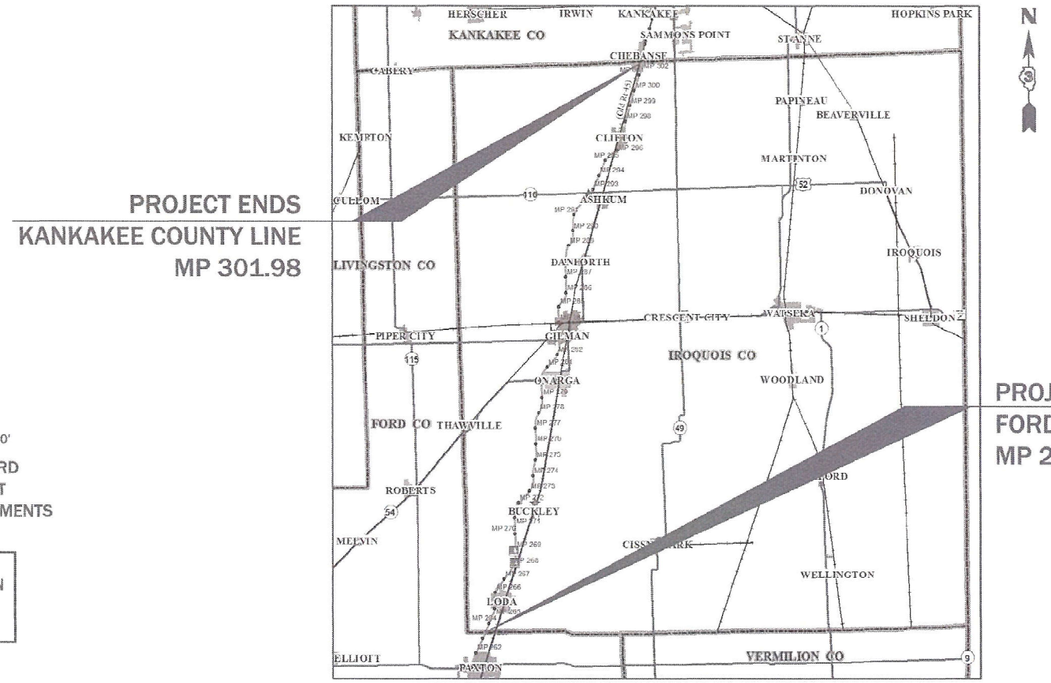

PROJECT ENDS
KANKAKEE COUNTY LINE
MP 301.98

PROJECT BEGINS
FORD COUNTY LINE
MP 263.51

GROSS LENGTH = 203,121.6 FT. = 38.47 MILES
NET LENGTH = 203,121.6 FT. = 38.47 MILES

FUNCTION CLASSIFICATION
RURAL INTERSTATE
2019 ADT = 17900
P.V. = 64.1% S.U. = 3.5% M.U. = 32.4%

0 100' 200' 300' — 1" = 100'
0 10' 20' 30' — 1" = 10'
0 50' 100' — 1" = 50'
0 50' 100' — 1" = 40'
0 50' 100' — 1" = 30'
0 50' 100' — 1" = 20'

FULL SIZE PLANS HAVE BEEN PREPARED USING STANDARD ENGINEERING SCALES. REDUCED SIZED PLANS WILL NOT CONFORM TO STANDARD SCALES. IN MAKING MEASUREMENTS ON REDUCED PLANS, THE ABOVE SCALES MAY BE USED.

J.U.L.I.E.
JOINT UTILITY LOCATION INFORMATION FOR EXCAVATION
1-800-892-0123
OR 811

STATE OF ILLINOIS
DEPARTMENT OF TRANSPORTATION

SUBMITTED March 23 20 20
REGIONAL ENGINEER

May 8, 2020
ENGINEER OF DESIGN AND ENVIRONMENT

May 8, 2020
DIRECTOR OF HIGHWAYS PROJECT IMPLEMENTATION

PROJECT ENGINEER: BRAD DUNCAN
UNIT CHIEF: DARCY CARPENTER
DISTRICT 3 NO. (815) 434-6131

CONTRACT NO. 66K90

PRINTED BY THE AUTHORITY OF THE STATE OF ILLINOIS

GENERAL NOTES

FOR STABILIZATION, ALL TYPE III BARRICADES WILL REQUIRE A MINIMUM OF FOUR SAND BAGS PER BARRICADE.

ALL EXCAVATED MATERIAL, WHICH INCLUDES DIGGING OR GRADING OF ANY SOIL OR FILL MATERIAL, WITH THE EXCEPTION OF AGGREGATE FILLS, MUST BE INCORPORATED WITHIN THE IDOT RIGHT OF WAY DUE TO ENVIRONMENTAL DOCUMENTATION REQUIREMENTS.

ANY REFERENCE TO A STANDARD IN THESE PLANS SHALL BE INTERPRETED TO MEAN THE EDITION AS INDICATED BY THE SUBNUMBER SHOWN IN THE LIST OF STANDARDS OR THE COPY INCLUDED IN THESE PLANS.

THE CONTRACTOR SHALL CONTACT JULIE AT LEAST 48 HOURS PRIOR TO EXCAVATION TO DETERMINE WHICH UTILITIES ARE IN THE AREA.

STATE OF ILLINOIS
DEPARTMENT OF TRANSPORTATION
DISTRICT THREE
AS BUILT INFORMATION

SUPERVISING CONSTRUCTION FIELD ENGINEER

RESIDENT ENGINEER / TECHNICIAN

START & END DATES OF CONSTRUCTION:

INSPECTORS:

STATE OF ILLINOIS
DEPARTMENT OF TRANSPORTATION
DISTRICT THREE

PREPARED BY:

DISTRICT STUDIES & PLANS ENGINEER

DATE:

EXAMINED BY:

DISTRICT CONSTRUCTION ENGINEER

DISTRICT MATERIALS ENGINEER

DISTRICT OPERATIONS ENGINEER

CODE NO.	ITEM	UNIT	TOTAL QUANTITY	CONSTR. CODE 100% STATE ROADWAY 0005 RURAL
44200610	CLASS A PATCHES, TYPE II, 13 INCH	SQ YD	548	548
44200612	CLASS A PATCHES, TYPE III, 13 INCH	SQ YD	112	112
44200614	CLASS A PATCHES, TYPE IV, 13 INCH	SQ YD	32	32
44213000	PATCHING REINFORCEMENT	SQ YD	692	692
44213200	SAW CUTS	FOOT	2816	2816
44213204	TIE BARS 3/4"	EACH	3120	3120
67100100	MOBILIZATION	L SUM	1	1
70100420	TRAFFIC CONTROL AND PROTECTION, STANDARD 701411	EACH	28	28
70100800	TRAFFIC CONTROL AND PROTECTION, STANDARD 701401	L SUM	1	1
70103815	TRAFFIC CONTROL SURVEILLANCE	CAL DA	5	5
70107025	CHANGEABLE MESSAGE SIGN	CAL DA	14	14
* 78008210	POLYUREA PAVEMENT MARKING TYPE I - LINE 4"	FOOT	426	426
* 78008230	POLYUREA PAVEMENT MARKING TYPE I - LINE 6"	FOOT	710	710
X1700018	CLASS A PATCH - EXPANSION JOINT	FOOT	84	84

*= SPECIALTY ITEM

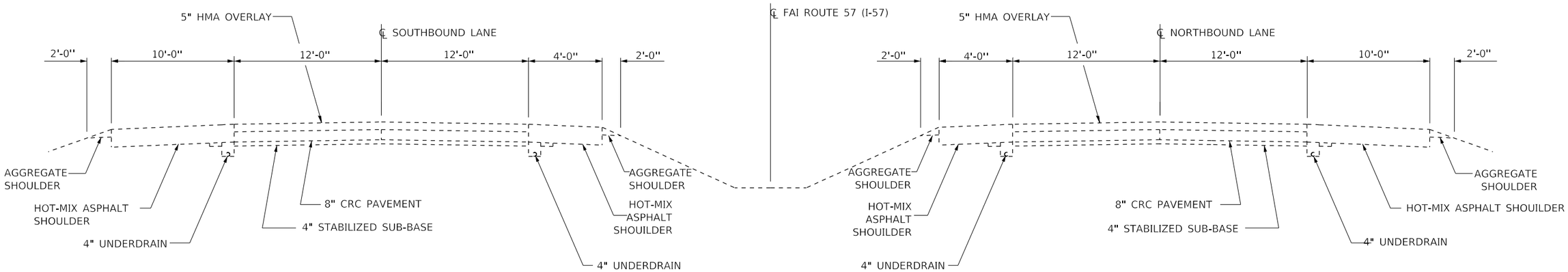

TYPICAL SECTION

M.M. 263.51 TO M.M. 301.98
IROQUOIS COUNTY

MODEL: Default
FILE NAME: pw:\\planroom.dot.illinois.gov:PWIDOT\Documents\IDOT Offices\District 3\Projects\D366490\CADData\D366490-sht-cover.dgn

USER NAME = pletschtr	DESIGNED - _____	REVISED - _____	
	DRAWN - _____	REVISED - _____	
PLOT SCALE = 100.0000 ' / in.	CHECKED - _____	REVISED - _____	
PLOT DATE = 3/23/2020	DATE - _____	REVISED - _____	

STATE OF ILLINOIS
DEPARTMENT OF TRANSPORTATION

TYPICAL SECTIONS

SCALE: _____ SHEET __ OF __ SHEETS STA. _____ TO STA. _____

F.A.I. RTE.	SECTION	COUNTY	TOTAL SHEETS	SHEET NO.
57	D3 I-57 PP 2020-11	IROQUOIS	11	4

CONTRACT NO. 66K90

ILLINOIS FED. AID PROJECT

LOCATION	NORTHBOUND PASSING LANE								NORTHBOUND DRIVING LANE							
	PATCH LENGTH	CLASS A PATCHING TYPE II 13"	TYPE III 13"	TYPE IV 13"	PATCH REINF.	EXP JT	SAW CUTS	TIE BARS 3/4"	PATCH LENGTH	CLASS A PATCHING TYPE II 13"	TYPE III 13"	TYPE IV 13"	PATCH REINF.	EXP JT	SAW CUTS	TIE BARS 3/4"
MILE MARKER	FEET	SQ YD	SQ YD	SQ YD	SQ YD	FOOT	FOOT	EACH	FEET	SQ YD	SQ YD	SQ YD	SQ YD	FOOT	FOOT	EACH
269.3									6	8			8		36	42
271.7									6	8			8		36	42
271.7	6	8			8		36	42								
276.6									6	8			8		36	42
276.7									6	8			8		36	42
277.4									6	8			8		36	42
279.4									6	8			8		36	42
279.6									6	8			8		36	42
280.1	6	8			8		36	42								
280.5									6	8			8		36	42
282.6									6	8			8		36	42
284.5									6	8			8		36	42
285.0									6	8			8		36	42
285.0									6	8			8		36	42
285.0									6	8			8		36	42
285.1									6	8			8		36	42
285.4									6	8			8		36	42
286.6	12		16		16	12	48	42								
286.6									12		16		16	12	48	42
287.2	6	8			8		36	42								
287.7									6	8			8		36	42
287.9									6	8			8		36	42
288.2									6	8			8		36	42
288.2									10	13			13		44	42
288.2									6	8			8		36	42
289.3	6	8			8		36	42								
290.3									6	8			8		36	42
291.5									6	8			8		36	42
292.1	6	8			8		36	42								
292.3									6	8			8		36	42
TOTAL		40	16		56	12	228	252		189	16		205	12	884	1008

MODEL: Default
FILE NAME: pw:\\ildanoom.dot.illinois.gov:PWIDOT\Documents\IDOT Offices\District 3\Projects\D366K90\CADData\D366K90-sht-detlk.dgn

USER NAME = pletschtr	DESIGNED - _____	REVISED - _____	
	DRAWN - _____	REVISED - _____	
PLOT SCALE = 100.0000 ' / in.	CHECKED - _____	REVISED - _____	
PLOT DATE = 3/23/2020	DATE - _____	REVISED - _____	

STATE OF ILLINOIS
DEPARTMENT OF TRANSPORTATION

SCHEDULES

SCALE: _____ | SHEET __ OF __ SHEETS | STA. _____ TO STA. _____

F.A.I. RTE.	SECTION	COUNTY	TOTAL SHEETS	SHEET NO.
57	D3 I-57 PP 2020-11	IROQUOIS	11	5
		CONTRACT NO. 66K90		
	ILLINOIS	FED. AID PROJECT		

LOCATION	SOUTHBOUND PASSING LANE								SOUTHBOUND DRIVING LANE							
	PATCH LENGTH	CLASS A PATCHING TYPE II 13"	CLASS A PATCHING TYPE III 13"	CLASS A PATCHING TYPE IV 13"	PATCH REINF.	EXP JT	SAW CUTS	TIE BARS 3/4"	PATCH LENGTH	CLASS A PATCHING TYPE II 13"	CLASS A PATCHING TYPE III 13"	CLASS A PATCHING TYPE IV 13"	PATCH REINF.	EXP JT	SAW CUTS	TIE BARS 3/4"
MILE MARKER	FEET	SQ YD	SQ YD	SQ YD	SQ YD	FOOT	FOOT	EACH	FEET	SQ YD	SQ YD	SQ YD	SQ YD	FOOT	FOOT	EACH
301.9	6	8			8		36	42	6	8			8		36	42
299.7									6	8			8		36	42
296.2									6	8			8		36	42
295.6	6	8			8		36	42								
295.1									6	8			8		36	42
295.1									6	8			8		36	42
292.9									6	8			8		36	42
289.9	6	8			8		36	42								
289.4									24			32	32		72	54
287.3									10	13			13		44	42
283.8									6	8			8		36	42
283.8									6	8			8		36	42
283.8									6	8			8		36	42
283.3									6	8			8		36	42
283.2									6	8			8		36	42
282.5									6	8			8		36	42
282.2	12		16		16	12	48	42								
282.2									12		16		16	12	48	42
282.1	12		16		16	12	48	42								
282.0	10	13			13		44	42								
281.2									10	13			13		44	42
281.2	6	8			8		36	42	6	8			8		36	42
281.0									6	8			8		36	42
281.0									6	8			8		36	42
280.5									6	8			8		36	42
280.5									6	8			8		36	42
276.8									6	8			8		36	42
276.6									6	8			8		36	42
275.8									6	8			8		36	42
275.5									6	8			8		36	42
274.9									6	8			8		36	42
273.9	12		16		16	12	48	42	12		16		16	12	48	42
273.8									6	8			8		36	42
271.1									6	8			8		36	42
271.0									6	8			8		36	42
270.0									6	8			8		36	42
269.9									6	8			8		36	42
269.0									6	8			8		36	42
269.0									6	8			8		36	42
267.2									6	8			8		36	42
265.4									6	8			8		36	42
TOTAL		45	48		93	36	332	336		274	32	32	338	24	1372	1524

SCHEDULE - PAVEMENT MARKING
NORTHBOUND LANES

LOCATION	POLYUREA PAVEMENT MARKING TYPE I LINE 4"		POLYUREA PAVEMENT MARKING TYPE I LINE 6"
	FEET		FEET
MILE POST	YELLOW (PL)	WHITE (DL)	WHITE (CL)
269.30		6	10
271.70		6	10
271.70	6		10
276.60		6	10
276.70		6	10
277.40		6	10
279.40		6	10
279.60		6	10
280.10	6		10
280.50		6	10
282.60		6	10
284.50		6	10
285.00		6	10
285.00		6	10
285.00		6	10
285.10		6	10
285.40		6	10
286.60	12		10
286.60		12	10
287.20	6		10
287.70		6	10
287.90		6	10
288.20		6	10
288.20		10	10
288.20		6	10
289.30	6		10
290.30		6	10
291.50		6	10
292.10	6		10
292.30		6	10
SUBTOTAL	42	154	
TOTAL	196		300

SCHEDULE - PAVEMENT MARKING
SOUTHBOUND LANES

LOCATION	POLYUREA PAVEMENT MARKING TYPE I LINE 4"		POLYUREA PAVEMENT MARKING TYPE I LINE 6"
	FEET		FEET
MILE POST	YELLOW (PL)	WHITE (DL)	WHITE (CL)
301.90	6	6	10
299.70		6	10
296.20		6	10
295.60	6		10
295.10		6	10
295.10		6	10
292.90		6	10
289.90	6		10
289.40		24	10
287.30		10	10
283.80		6	10
283.80		6	10
283.80		6	10
283.30		6	10
283.20		6	10
282.50		6	10
282.20	12		10
282.20		12	10
282.10	12		10
282.00	10		10
281.20		10	10
281.20	6	6	10
281.00		6	10
281.00		6	10
280.50		6	10
280.50		6	10
276.80		6	10
276.60		6	10
275.80		6	10
275.50		6	10
274.90		6	10
273.90	12	12	10
273.80		6	10
271.10		6	10
271.00		6	10
270.00		6	10
269.90		6	10
269.00		6	10
269.00		6	10
267.20		6	10
265.40		6	10
SUBTOTAL	52	178	
TOTAL	230		410

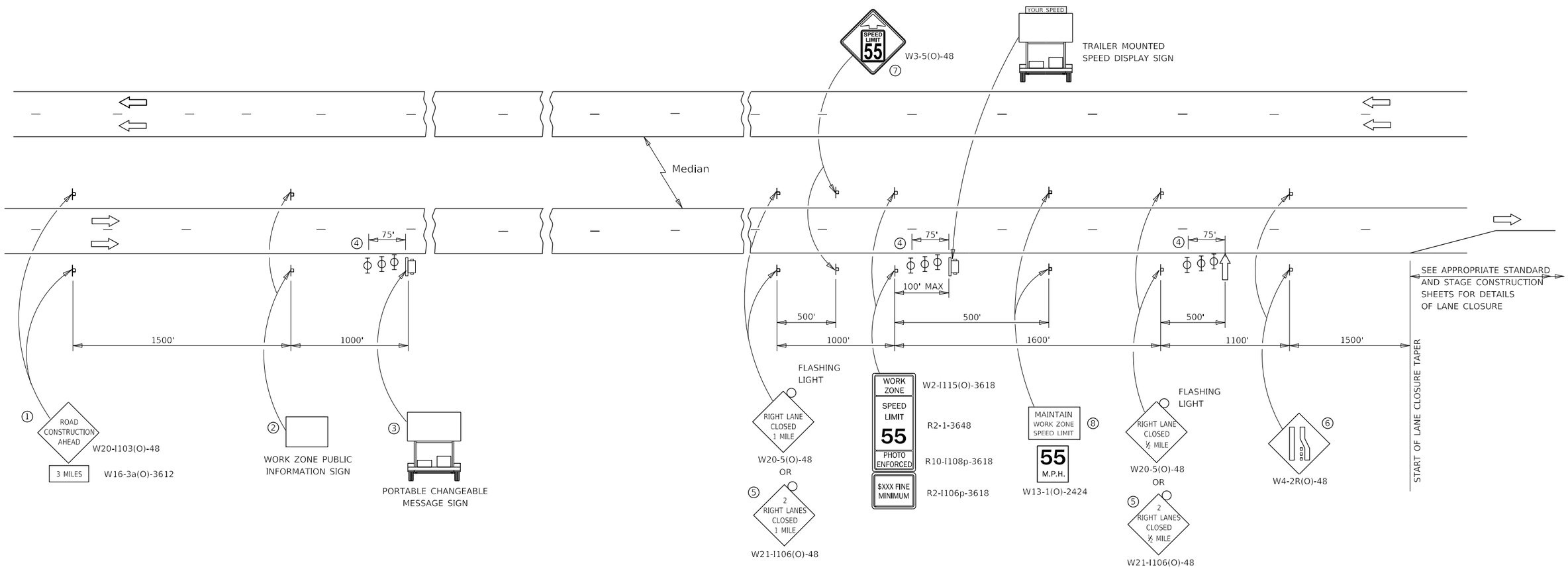

1. THE ROAD CONSTRUCTION AHEAD SIGN SHALL BE LOCATED 3 MILES IN ADVANCE OF THE PROJECT LIMITS.

2. THE MESSAGE AND SIZE OF THE WORK ZONE PUBLIC INFORMATION SIGN SHALL BE AS SPECIFIED BY THE DEPARTMENT.

3. TO BE PLACED IN THE MEDIAN WHEN FEASIBLE. THE MESSAGE BOARD SHALL BE USED TO DISPLAY STATUS OF LANES WITHIN THE PROJECT. THE PRIMARY MESSAGES SHALL BE:
   "RIGHT LANE CLOSED" / " x MILES AHEAD"
   "LEFT LANE CLOSED" / " x MILES AHEAD"
   "ALL LANES OPEN"

4. THREE, TYPE II BARRICADES, DRUMS, OR VERTICAL BARRICADES AT 25' CENTERS.

5. THIS SIGN SHALL BE USED WHEN 2 LANES ARE CLOSED.

6. WHEN THE LEFT LANE IS CLOSED, SWITCH THESE TWO SIGNS AND THE DIRECTION OF THE MERGE ARROW.

7. THIS SIGN SHALL ONLY BE USED IF THE EXISTING SPEED LIMIT IS GREATER THAN 65 MPH.

8. 48"x36" FLUORESCENT ORANGE SIGN WITH BLACK LETTERS.

48"

36"	MAINTAIN	8"
	WORK ZONE	6"
	SPEED LIMIT	6"

ARROW BOARD

PORTABLE CHANGEABLE MESSAGE SIGN

SIGN

TYPE II BARRICADE, DRUM, OR VERTICAL BARRICADE WITH MONODIRECTIONAL FLASHING LIGHT

GENERAL NOTE:

THIS STANDARD IS USED WHERE AT ANY TIME A LANE IS CLOSED ON A FREEWAY/EXPRESSWAY.

WHEN THE LEFT LANE IS CLOSED, LEFT LANE CLOSED SIGNS SHALL BE SUBSTITUTED FOR THE RIGHT LANE CLOSED SIGNS.

THE FIRST THREE SIGNS AND THE MESSAGE BOARD ARE STATIONARY. THE OTHER SIGNS AND ARROWBOARDS SHALL BE MOVED AS NECESSARY TO MAINTAIN THE REQUIRED DISTANCE FROM THE START OF THE LANE CLOSURE TAPER(S).

SEE SPECIAL PROVISIONS.

ALL DIMENSIONS ARE IN INCHES UNLESS OTHERWISE SHOWN.

MODEL: Default
FILE NAME: pw:\\planroom.dot.illinois.gov:PWIDOT\Documents\IDOT Offices\District 3\Projects\D366K90\CADData\D366K90-sht-details.dgn

USER NAME = pletschtr	DESIGNED - _____	REVISED - _____	
	DRAWN - _____	REVISED - _____	
PLOT SCALE = 100.0000 ' / in.	CHECKED - _____	REVISED - _____	
PLOT DATE = 3/23/2020	DATE - _____	REVISED - _____	

STATE OF ILLINOIS
DEPARTMENT OF TRANSPORTATION

TRAFFIC CONTROL AND PROTECTION, STANDARD 701400

SCALE: _____ SHEET __ OF __ SHEETS STA. _____ TO STA. _____

F.A.I. RTE.	SECTION	COUNTY	TOTAL SHEETS	SHEET NO.
57	D3 I-57 PP 2020-11	IROQUOIS	11	8
		CONTRACT NO. 66K90		
		ILLINOIS FED. AID PROJECT		

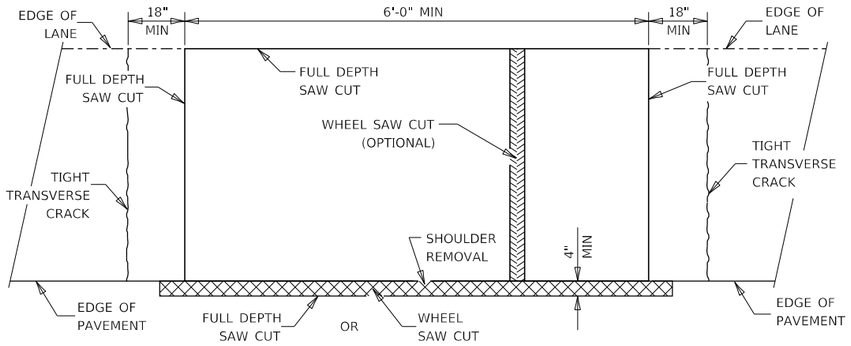

PAVEMENT SAWING DETAIL

(HMA SHOULDER)

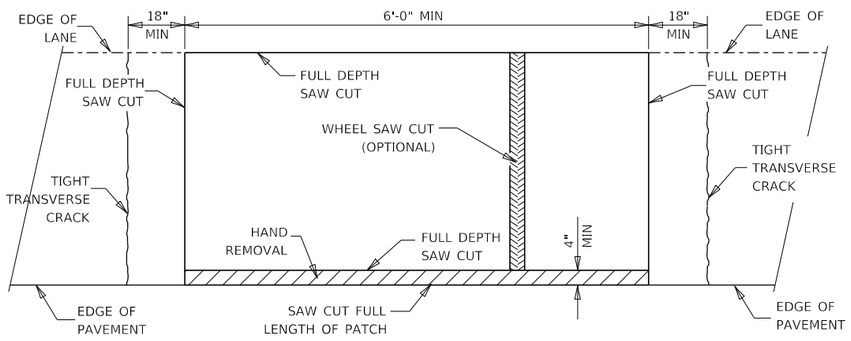

PAVEMENT SAWING DETAIL

(PCC SHOULDER)

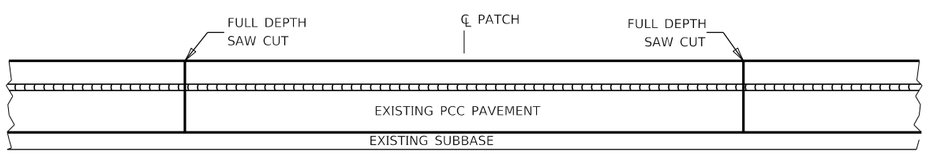

EXISTING PAVEMENT WITHOUT HMA SURFACE

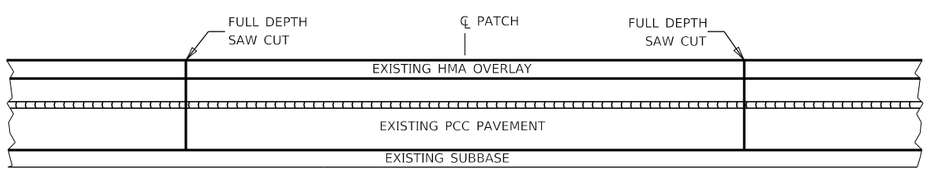

EXISTING PAVEMENT WITH HMA SURFACE

PAVEMENT SAWING DETAIL FOR CLASS A PATCHING (CRC PAVEMENT)

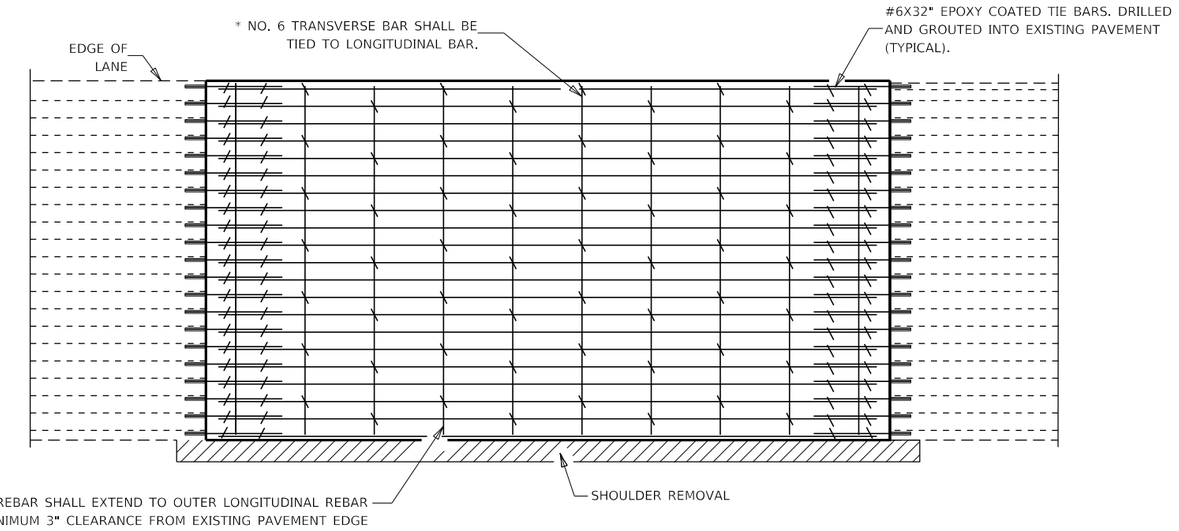

PAVEMENT REINFORCEMENT DETAIL

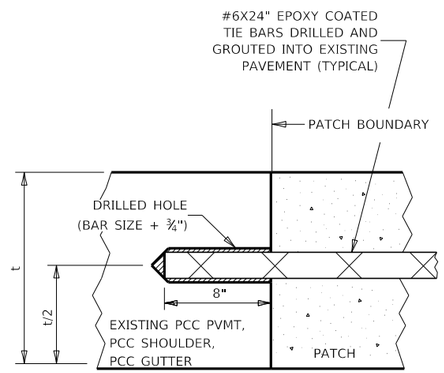

LONGITUDINAL CONSTRUCTION JOINT

PATCHES MORE THAN 20' IN LENGTH SHALL BE TIED TO ADJACENT PAVEMENT, PCC SHOULDERS OR PCC CURB AND GUTTER WITH #6x24" EPOXY COATED TIE BARS AT 36" CENTERS.

NOTES:

∗EXISTING LONGITUDINAL REINFORCEMENT SPACING; ±6".

SPACING OF NEW LONGITUDINAL REINFORCEMENT AND NEW LONGITUDINAL TIE BARS SHALL MATCH SPACING OF EXISTING REINFORCEMENT AND SHALL BE TIED TOGETHER WITH A MINIMUM OF TWO TIES PER BAR.

∗ EVERY THIRD INTERSECTION MUST BE TIED. WHEN THE MINIMUM CLEARANCE CANNOT BE OBTAINED WITH THE TRANSVERSE REBAR ON TOP, THEN THE TRANSVERSE REBAR SHALL BE TIED TO THE BOTTOM OF THE LONGITUDINAL REBAR.

∗∗ VARIABLE: WHERE S_1 AND S_2 ARE 2½" MIN. AND 12" MAX.

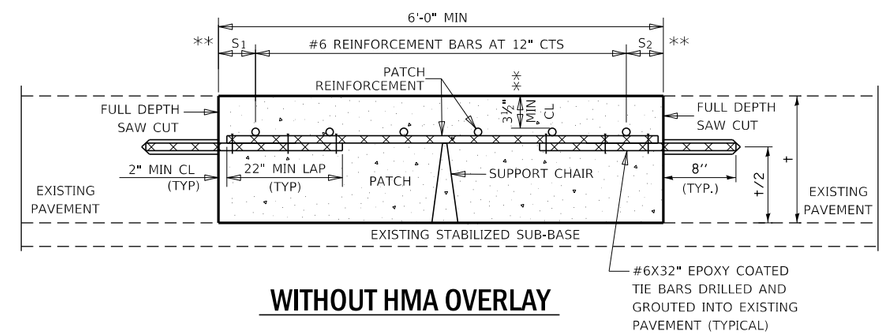

WITHOUT HMA OVERLAY

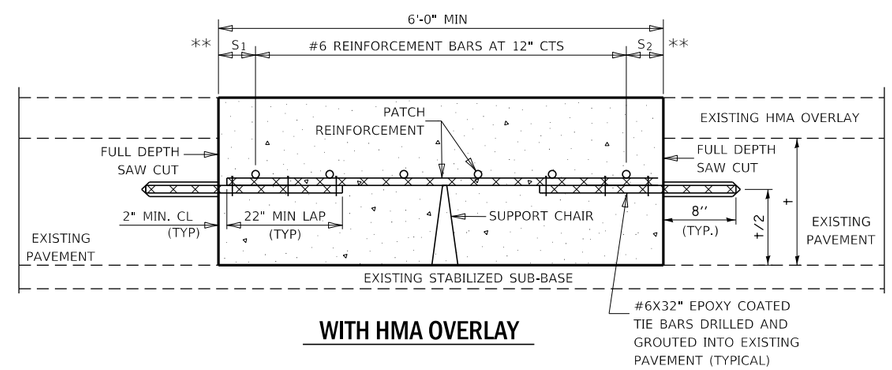

WITH HMA OVERLAY

PATCHING DETAIL FOR CLASS A PATCHING (CRC PAVEMENT)

SHEET 1 OF 2

USER NAME = pletschtr	DESIGNED - _____	REVISED - _____	
	DRAWN - _____	REVISED - _____	
PLOT SCALE = 100.0000 ' / in.	CHECKED - _____	REVISED - _____	
PLOT DATE = 3/23/2020	DATE - _____	REVISED - _____	

STATE OF ILLINOIS
DEPARTMENT OF TRANSPORTATION

CLASS A PATCHING DETAILS

SCALE: _____ | SHEET __ OF __ SHEETS | STA. _____ TO STA. _____

F.A.I. RTE.	SECTION	COUNTY	TOTAL SHEETS	SHEET NO.
57	D3 I-57 PP 2020-11	IROQUOIS	11	9
		CONTRACT NO. 66K90		
		ILLINOIS FED. AID PROJECT		

MODEL: Default
FILE NAME: pw:\\uborroom.dot.illinois.gov:PWIDOT\Documents\IDOT Offices\District 3\Projects\D366K90\CADData\D366K90-sht-detail5.dgn

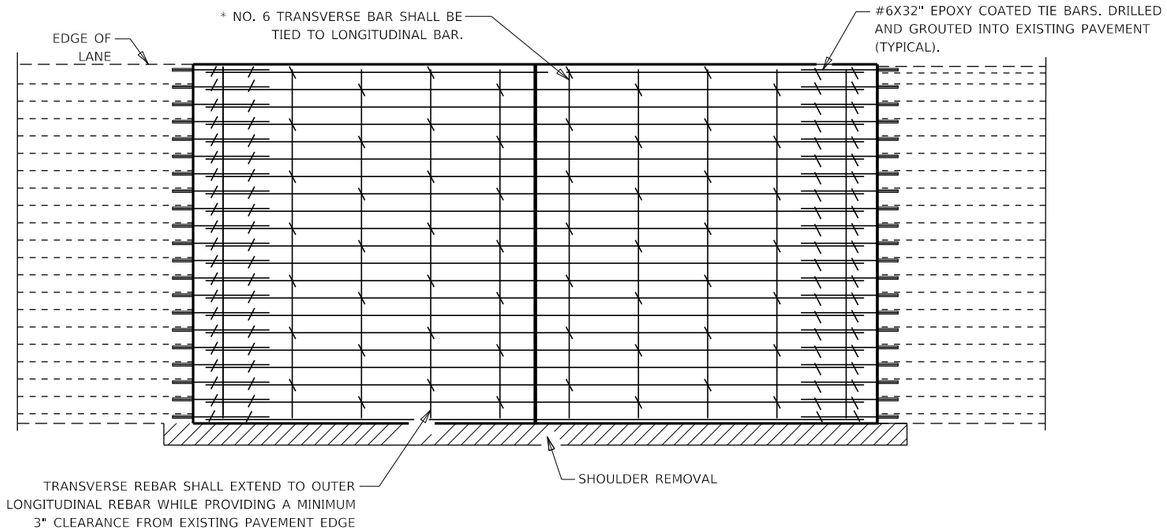

PAVEMENT REINFORCEMENT DETAIL

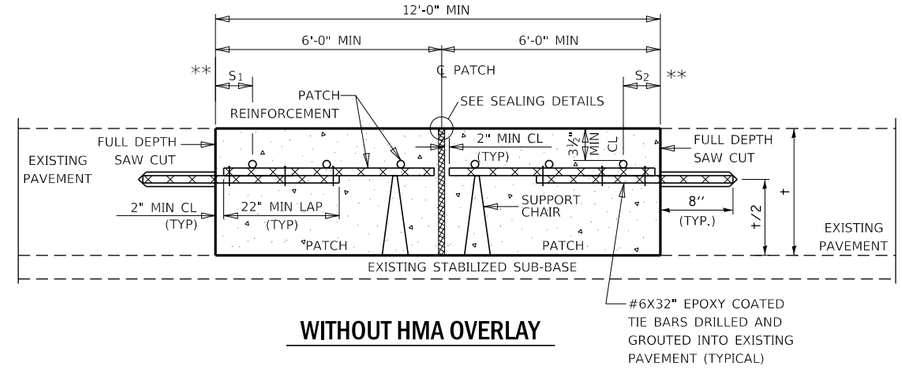

WITHOUT HMA OVERLAY

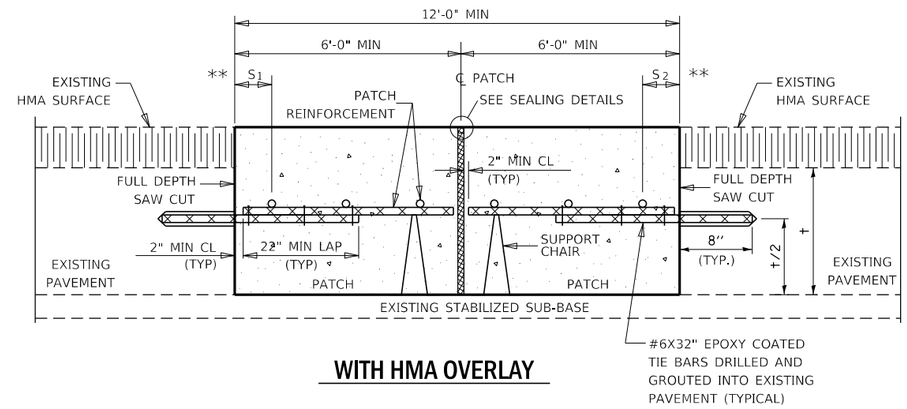

WITH HMA OVERLAY

CLASS A PATCH WITH EXPANSION JOINT

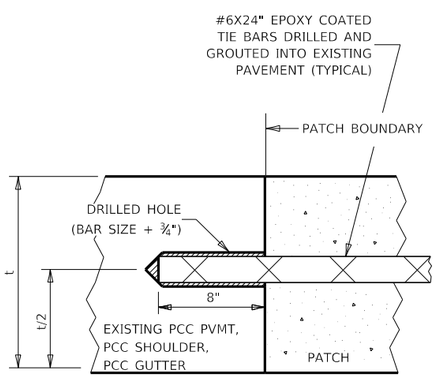

LONGITUDINAL CONSTRUCTION JOINT

PATCHES MORE THAN 20' IN LENGTH SHALL BE TIED TO ADJACENT PAVEMENT, PCC SHOULDERS OR PCC CURB AND GUTTER WITH #6x24" EPOXY COATED TIE BARS AT 36" CENTERS.

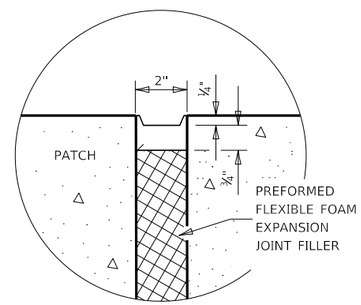

SEALING DETAIL

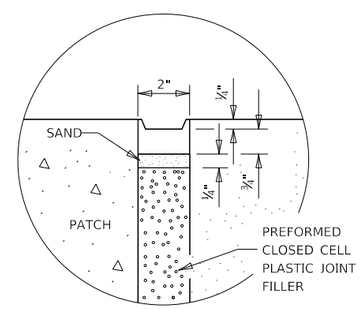

SEALING DETAIL

NOTES:

- EXISTING LONGITUDINAL REINFORCEMENT SPACING; ±6".

  SPACING OF NEW LONGITUDINAL REINFORCEMENT AND NEW LONGITUDINAL TIE BARS SHALL MATCH SPACING OF EXISTING REINFORCEMENT AND SHALL BE TIED TOGETHER WITH A MINIMUM OF TWO TIES PER BAR.

* EVERY THIRD INTERSECTION MUST BE TIED. WHEN THE MINIMUM CLEARANCE CANNOT BE OBTAINED WITH THE TRANSVERSE REBAR ON TOP, THEN THE TRANSVERSE REBAR SHALL BE TIED TO THE BOTTOM OF THE LONGITUDINAL REBAR.

** VARIABLE: WHERE S_1 AND S_2 ARE 2½" MIN. AND 12" MAX.

USER NAME = pletschtr	DESIGNED - _____	REVISED - _____	
	DRAWN - _____	REVISED - _____	
PLOT SCALE = 100.0000 ' / in.	CHECKED - _____	REVISED - _____	
PLOT DATE = 3/23/2020	DATE - _____	REVISED - _____	

STATE OF ILLINOIS
DEPARTMENT OF TRANSPORTATION

CLASS A PATCHING DETAILS

SCALE: _____ SHEET __ OF __ SHEETS STA. _____ TO STA. _____

F.A.I. RTE.	SECTION	COUNTY	TOTAL SHEETS	SHEET NO.
57	D3 I-57 PP 2020-11	IROQUOIS	11	10
		CONTRACT NO. 66K90		
		ILLINOIS	FED. AID PROJECT	

MODEL: Default
FILE NAME: pw:\\planroom.dot.illinois.gov:PWIDOT\Documents\IDOT Offices\District 3\Projects\D366490\CADData\D366490-sht-details.dgn

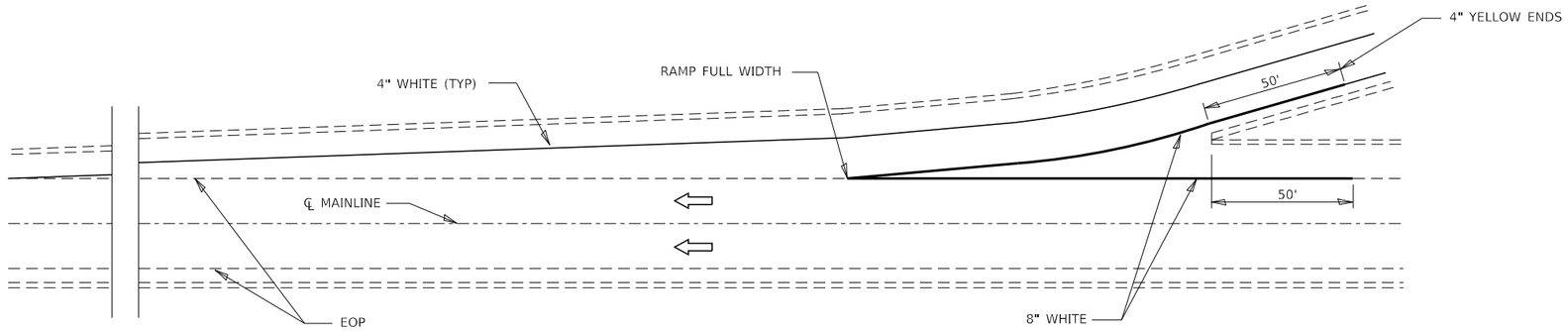

TYPICAL PAVEMENT MARKING FOR ENTRANCE RAMP TERMINALS

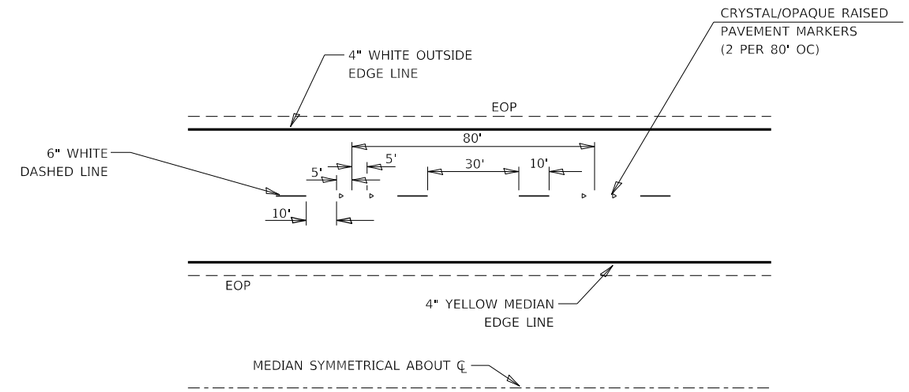

TYPICAL PAVEMENT MARKINGS

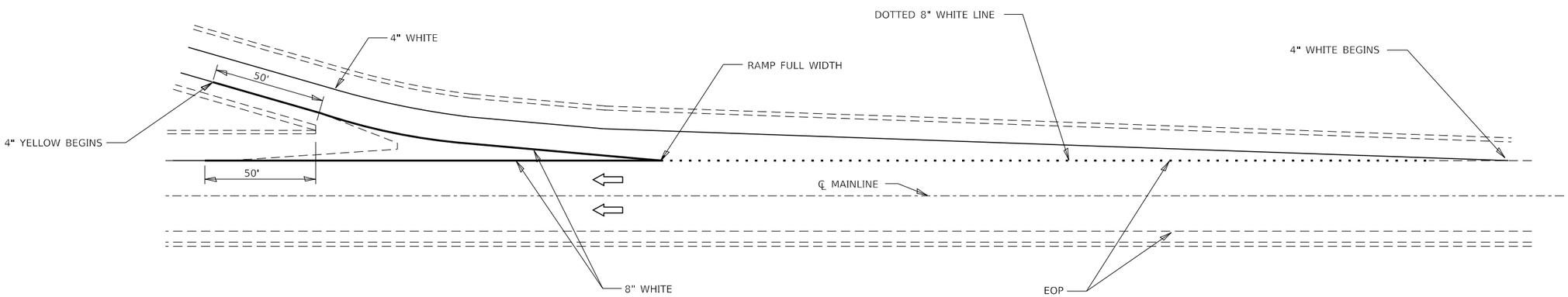

TYPICAL PAVEMENT MARKINGS FOR EXIT RAMP TERMINALS

MODEL: Default
FILE NAME: pw:\\ildnxoom.dot.illinois.gov:PWIDOT\Documents\IDOT Offices\District 3\Projects\D366K90\CADData\D366K90-ilt-detail.dgn

USER NAME = pletschtr	DESIGNED - _____	REVISED - _____	STATE OF ILLINOIS DEPARTMENT OF TRANSPORTATION
	DRAWN - _____	REVISED - _____	
PLOT SCALE = 100.0000 ' / in.	CHECKED - _____	REVISED - _____	
PLOT DATE = 3/23/2020	DATE - _____	REVISED - _____	

PAVEMENT MARKING DETAILS

SCALE: _____ SHEET ___ OF ___ SHEETS STA. _____ TO STA. _____

F.A.I. RTE.	SECTION	COUNTY	TOTAL SHEETS	SHEET NO.
57	D3 I-57 PP 2020-11	IROQUOIS	11	11
		CONTRACT NO. 66K90		
		ILLINOIS	FED. AID PROJECT	