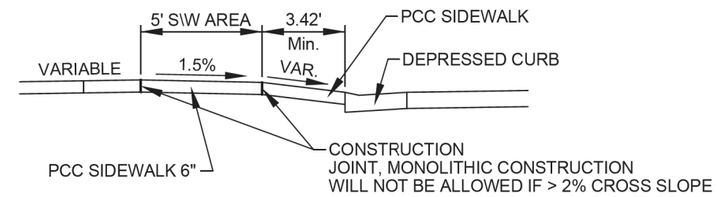

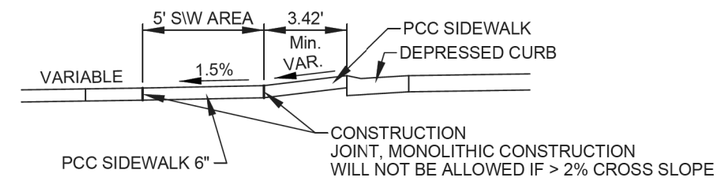

DETAIL OF SIDEWALK THROUGH ENTRANCES

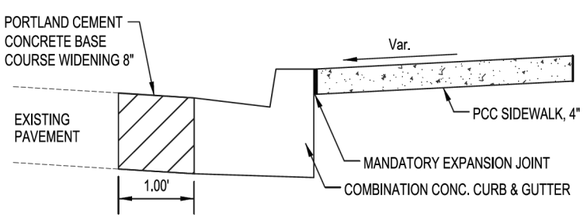

TYPICAL DETAIL OF SIDEWALK ABUTTING CURB

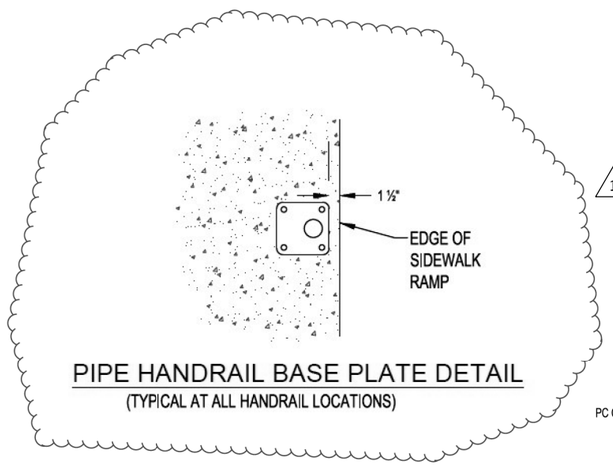

PIPE HANDRAIL BASE PLATE DETAIL

(TYPICAL AT ALL HANDRAIL LOCATIONS)

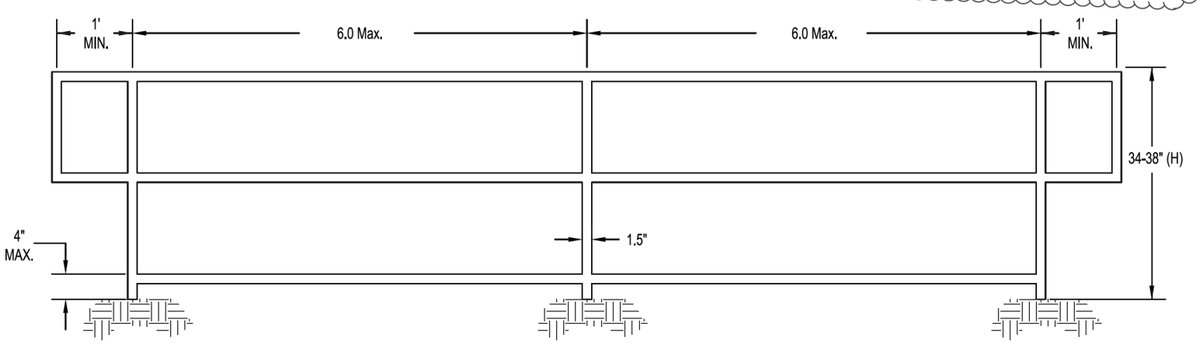

PIPE HANDRAIL TYPICAL SECTION

** The handrail shall be designed to withstand a 200 pound load applied in any direction to the top rail. Vertical posts shall be equally spaced along the panel at no more than 6 feet. The railing shall have three equally spaced horizontal elements, with the top of the lowest beam being no more than 4" off of the proposed surface. Extensions shall be placed a 1 foot beyond vertical edge of top and bottom steps and 1 foot beyond bottom of proposed ramps.The handrail shall be powder coated black. This work shall be paid for by the Contract Unit Price per FOOT for PIPE HANDRAIL and no additional compensation shall be allowed.

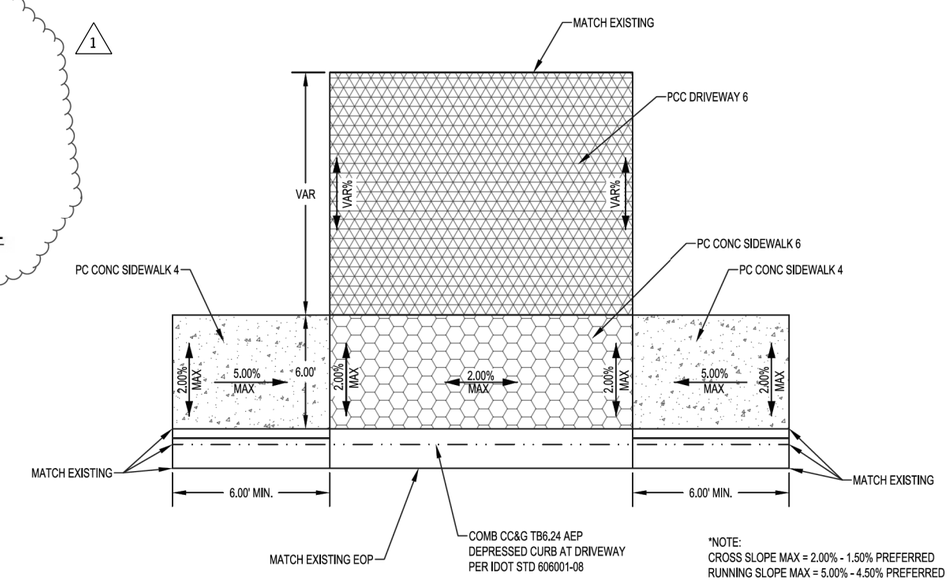

DETAIL OF SIDEWALK THROUGH ENTRANCES

Note: Saw cuts will be allowed at equal specifications to article 424.06.

1 06/03/2026

BY	DATE	REVISION (ISSUED)

SECTION	COUNTY	ILLINOIS	CONTRACT
21-00070-00-SW	FAYETTE		
FED. ROAD DIST. NO. 7			

FIELD BOOK	805/814/821
DRAWN BY	JCS
CHECKED BY	MJH
FILE LOCATION	S:\2020\2021\BG6\DWG\TITLE.DWG
PLOT DATE	Thursday, April 9, 2026 9:44:39 AM

MILANO & GRUNLOH ENGINEERS, LLC
114 W. WASHINGTON AVE. | PO BOX 397
EFFINGHAM, IL 62401
Phone: (217) 347-7262 | (800) 677-2714
Email: mgengineers@mgengineers.com
Web: www.mgengineers.com
Design Firm #184-003108

TYPICAL DETAILS

ITEP
21-00070-00-SW
VANDALIA, ILLINOIS

SHEET #
3 OF 66

JOB #
20210 BG6