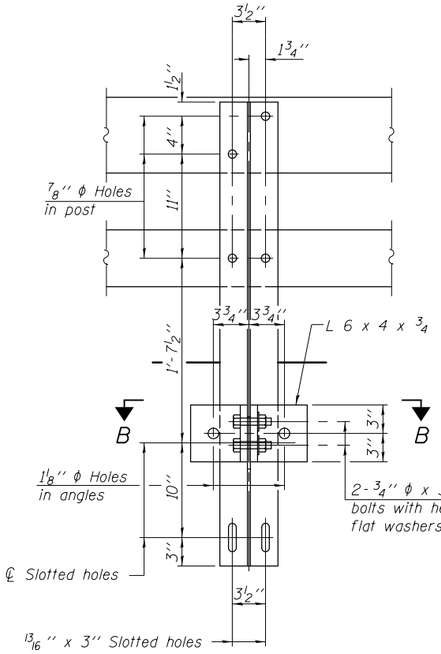

SECTION A-A

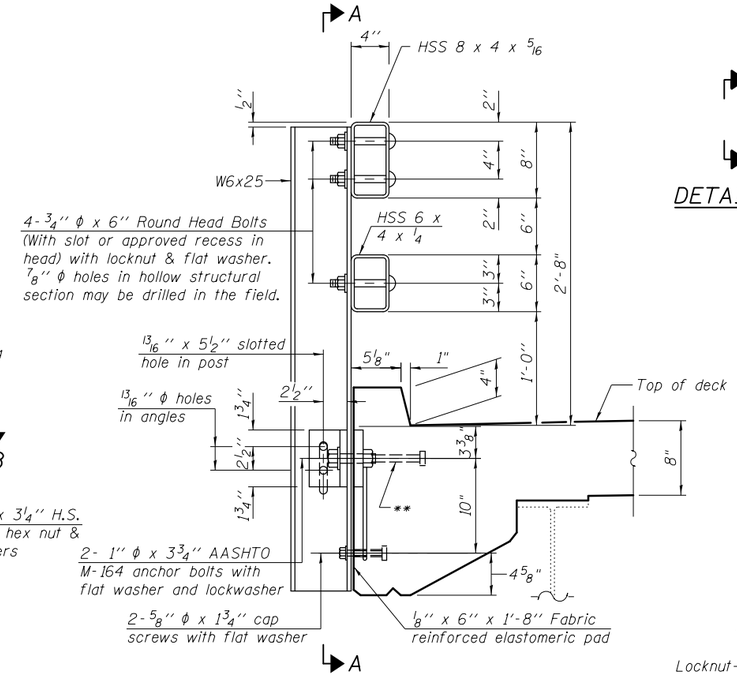

SECTION AT RAIL POST

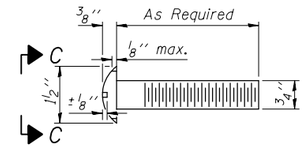

DETAIL OF ¾'' φ ROUND HEAD BOLT

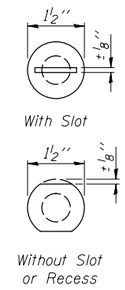

VIEW C-C

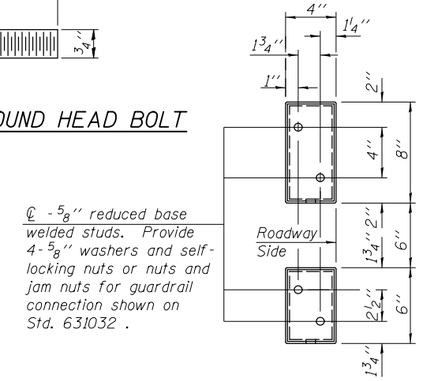

VIEW D-D

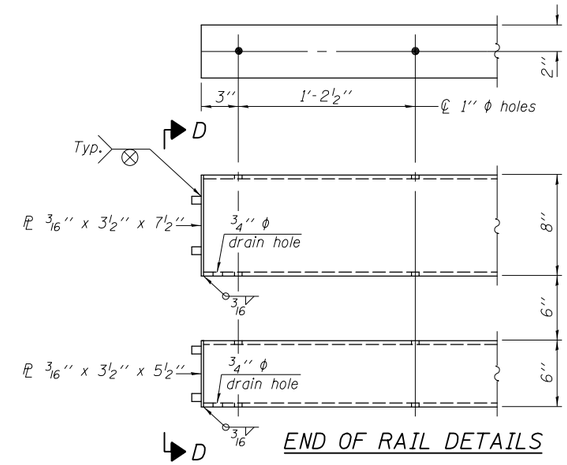

END OF RAIL DETAILS

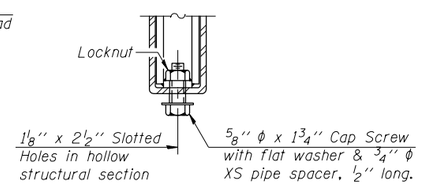

RAIL SPLICE CONNECTION AT EXPANSION JT.

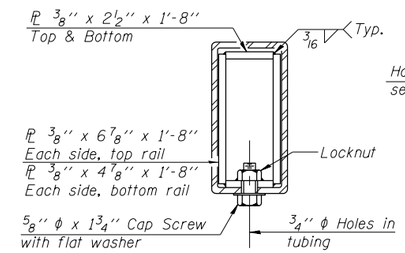

SECTION AT RAIL SPLICE

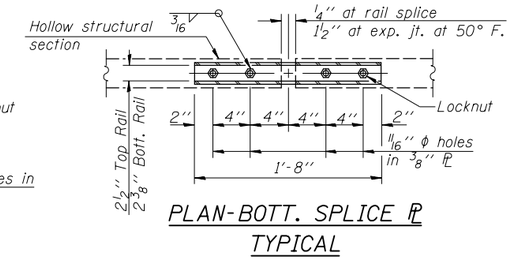

PLAN-BOTT. SPLICE PL TYPICAL

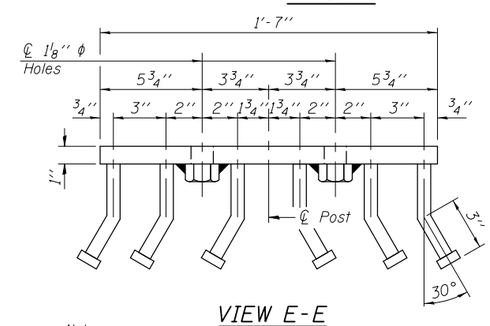

VIEW E-E

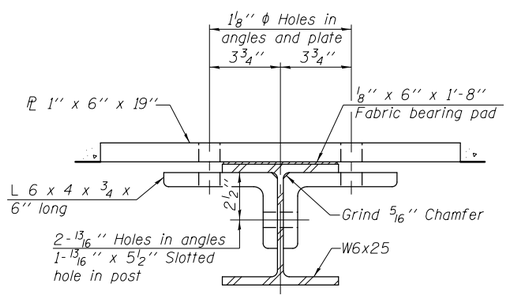

SECTION B-B

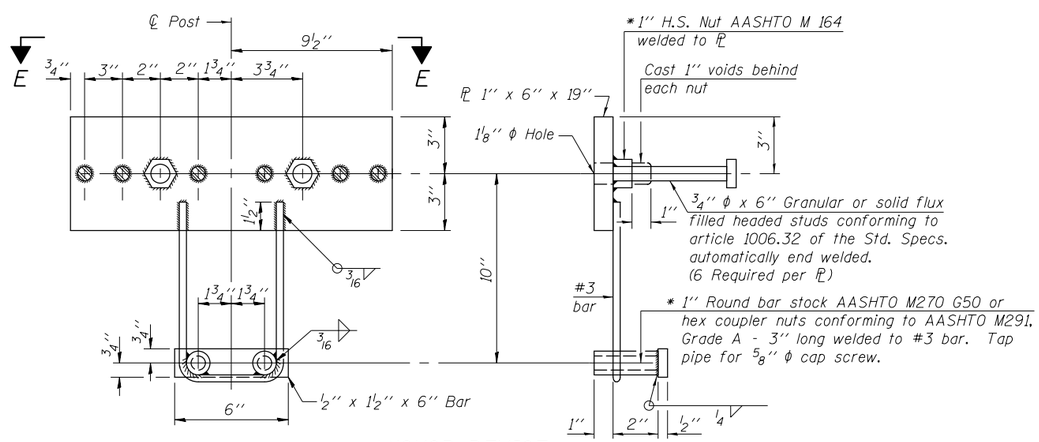

ANCHOR DEVICE

* Threaded areas shall be plugged or blocked off during casting of beam. Galvanized after fabrication.

Notes:

All field drilled holes shall be coated with an approved zinc rich paint before erection.

For multi-span bridges, sufficient ¼'' x 6'' x 1'-2'' galvanized steel shims shall be provided to align rail between adjacent spans. Cost included with Steel Railing, Type SM.

All steel railing elements shall be galvanized according to Article 509.05 of the Standard Specifications.

** The studs of the anchor devices shall be placed below the top reinforcement bars and the outermost longitudinal reinforcement bar shall be placed directly above the studs of the rail post anchor device.

BILL OF MATERIAL

Item	Unit	Quantity
Steel Railing, Type SM	Foot	272

(6'-3'' Maximum Post Spacing) (5'' minimum to 7⅛'' maximum CWS thickness)

FILENAME = F:\3-1319_Blodgett\Drawings\CADDSheets\0990181-68536-011-SM_Rail.dgn

BLOOM COMPANIES, LLC
Infrastructure Innovation and Ingenuity
600 W. Fulton Street, Suite 701 • Chicago, IL 60661
Phone: (312) 876-9500 Fax: (312) 876-9600

USER NAME = tborges	DESIGNED - KO	REVISED	
	CHECKED - KK	REVISED	
PLOT SCALE = N/A	DRAWN - KO	REVISED	
PLOT DATE = 3/31/2014	CHECKED - 3/27/2013	REVISED	

STATE OF ILLINOIS
DEPARTMENT OF TRANSPORTATION

STEEL RAILING, TYPE SM WITH CURB
STRUCTURE NO. 099-0181

SHEET NO. S11 OF S20 SHEETS

F.A.I. RTE.	SECTION	COUNTY	TOTAL SHEETS	SHEET NO.
55	99-2HB-3I-3	WILL	87	49
		CONTRACT NO. 60X60		
		ILLINOIS FED. AID PROJECT		