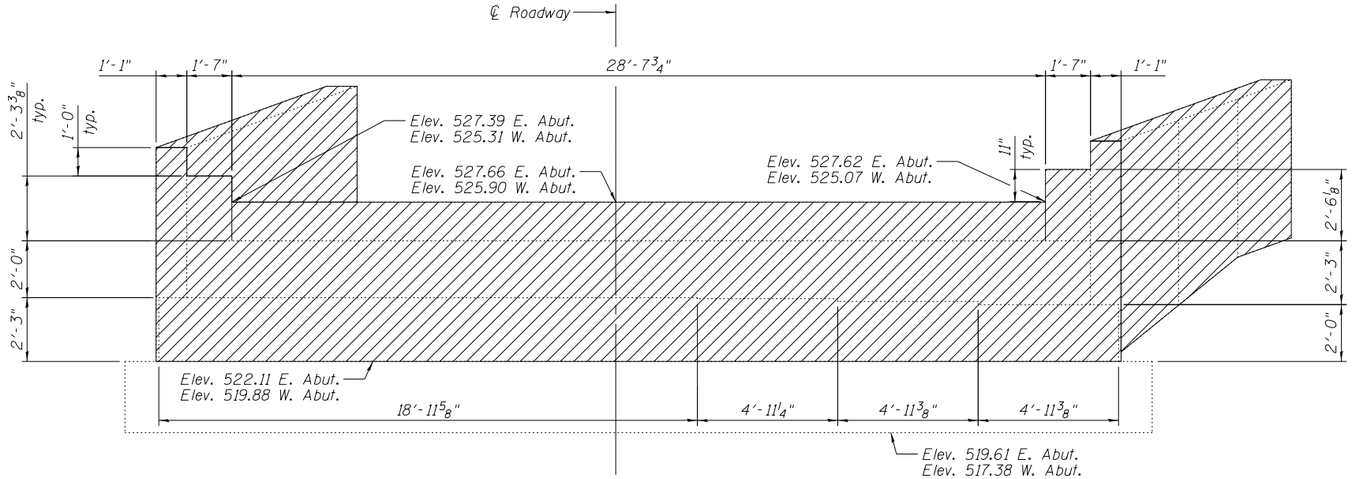

ELEVATION

(East Abutment Shown, West Abutment Opposite Hand)

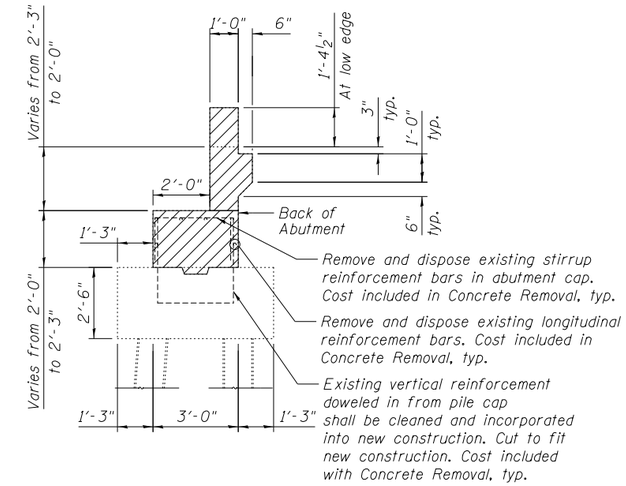

SECTION THRU ABUTMENT

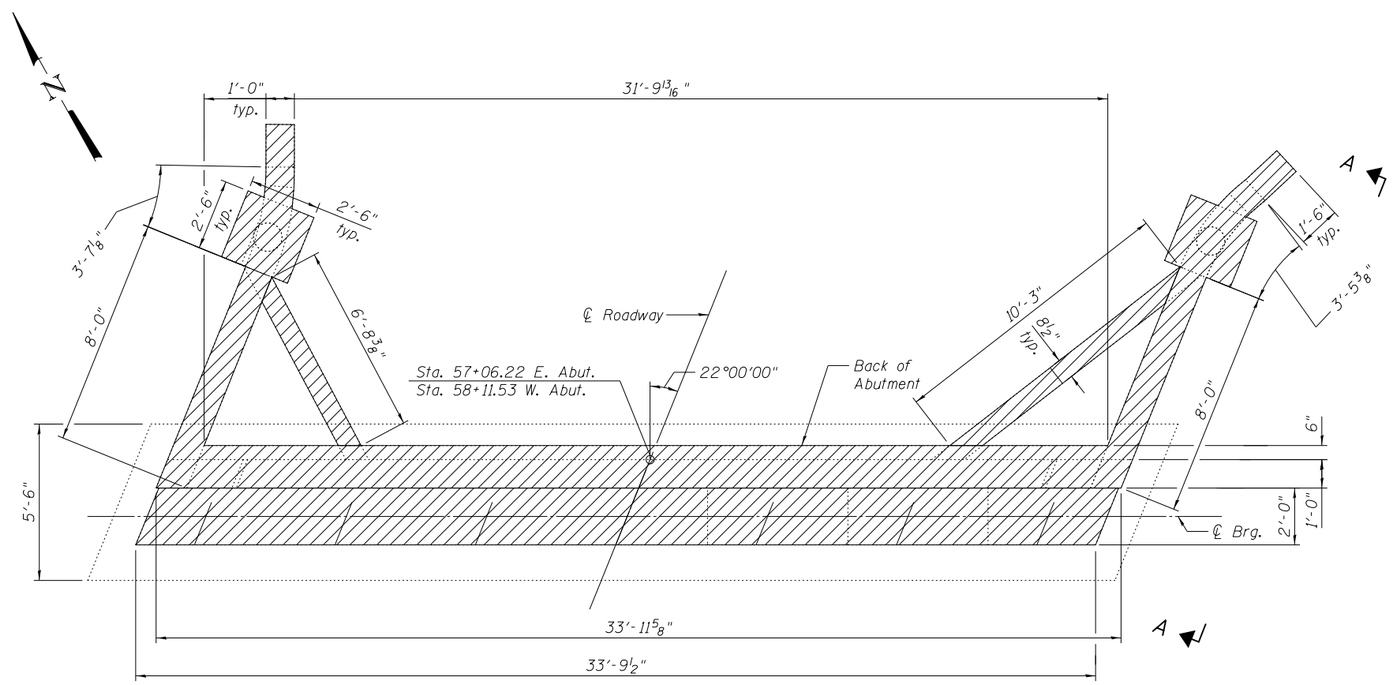

PLAN

(East Abutment Shown, West Abutment Opposite Hand)

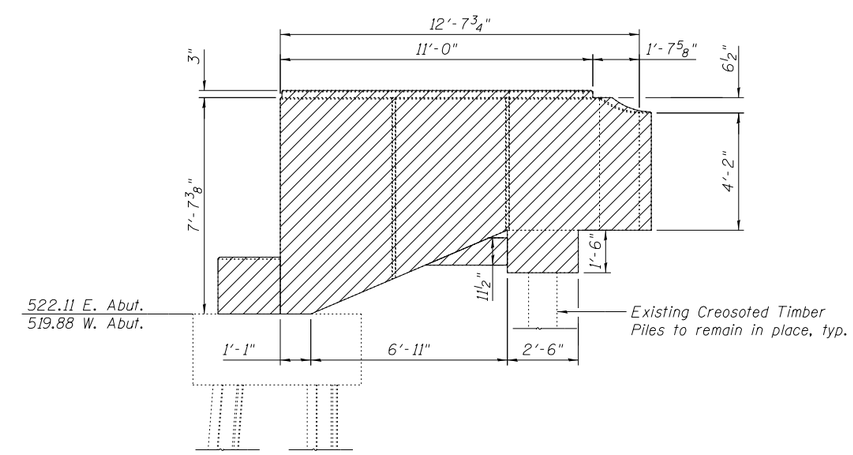

VIEW A-A

(South Face, East Abut. shown, North Face similar)

LEGEND

- Concrete Removal

BILL OF MATERIAL

Item	Unit	Total
Concrete Removal	Cu. Yds.	44.4

FILENAME = F:\3-1319_Blodgett\Drawings\CADDSheets\0990181-60536-015-Abut_conc-removal.dgn

BLOOM COMPANIES, LLC
Infrastructure Innovation and Ingenuity
600 W. Fulton Street, Suite 701 • Chicago, IL 60661
Phone: (312) 876-0500 Fax: (312) 876-0600

USER NAME = tborges	DESIGNED - KO	REVISED	
	CHECKED - BCM	REVISED	
PLOT SCALE = N/A	DRAWN - KO	REVISED	
PLOT DATE = 3/31/2014	CHECKED - 8/23/2012	REVISED	

STATE OF ILLINOIS
DEPARTMENT OF TRANSPORTATION

ABUTMENT CONCRETE REMOVAL
STRUCTURE NO. 099-0181

SHEET NO. S15 OF S20 SHEETS

F.A.I. RTE.	SECTION	COUNTY	TOTAL SHEETS	SHEET NO.
55	99-2HB-3I-3	WILL	87	53
		CONTRACT NO. 60X60		
		ILLINOIS FED. AID PROJECT		