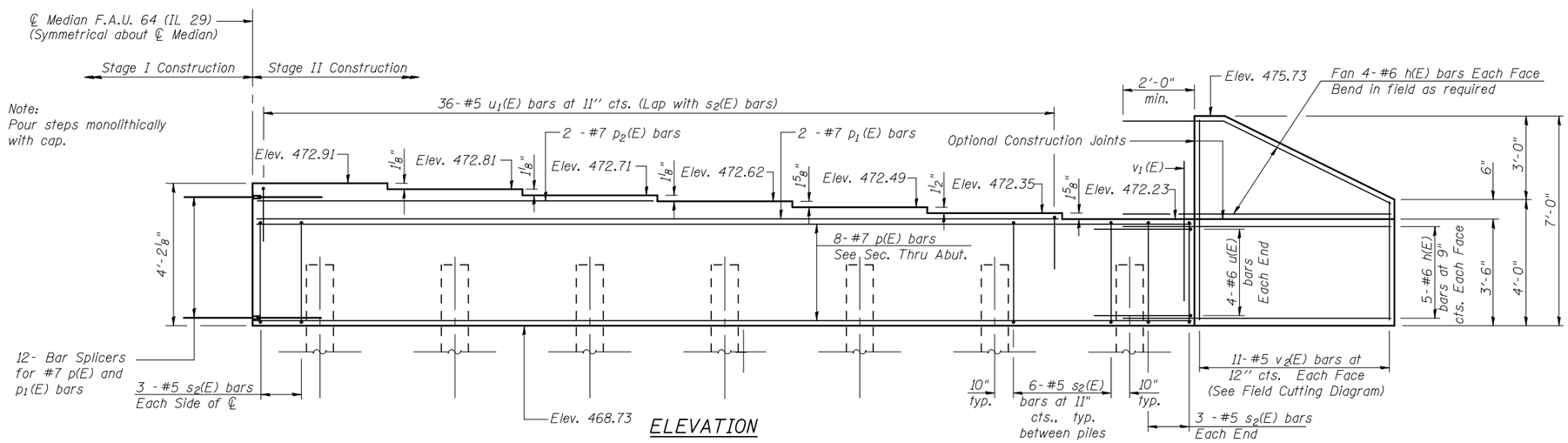

ELEVATION

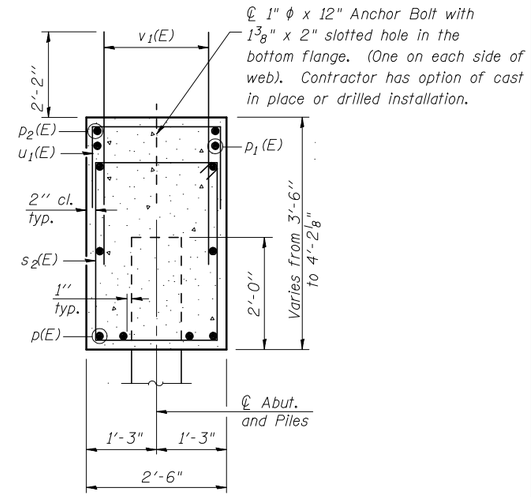

SEC. THRU ABUT.

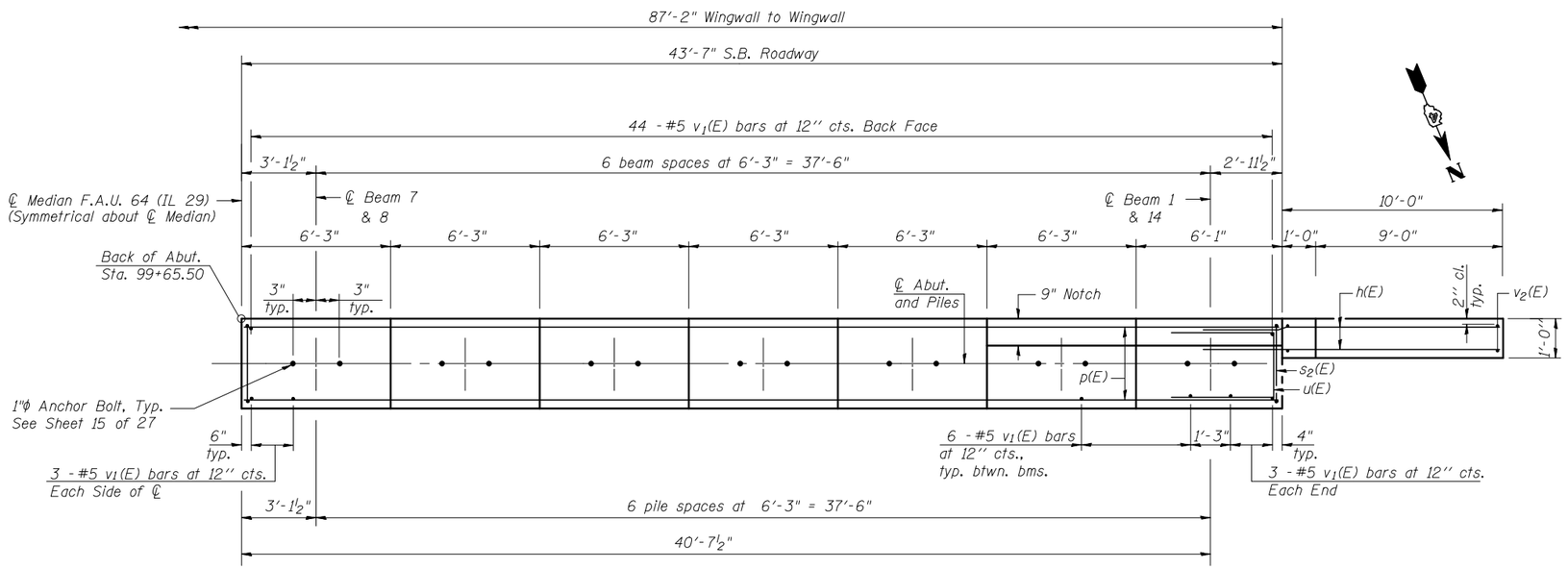

PLAN

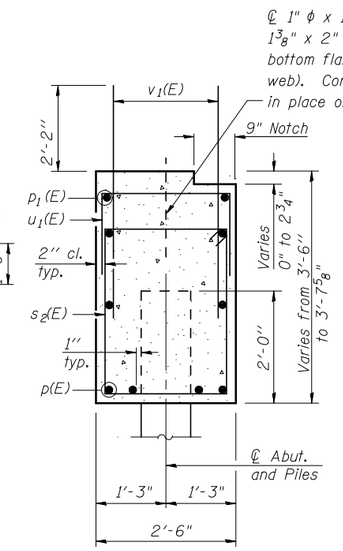

SEC. THRU ABUT. AT BEAMS 1, 2, 13 & 14

BILL OF MATERIAL

Bar	No.	Size	Length	Shape
h(E)	36	#6	12'-0"	
p(E)	16	#7	43'-3"	
p1(E)	4	#7	37'-2"	
p2(E)	4	#7	18'-5"	
s2(E)	84	#5	11'-1"	
u(E)	8	#6	10'-1"	
u1(E)	72	#5	6'-8"	
v1(E)	172	#5	4'-4''	
v2(E)	44	#5	10'-4"	
Structure Excavation		Cu. Yd.	172	
Concrete Structures		Cu. Yd.	35.3	
Reinforcement Bars, Epoxy Coated		Pound	5410	
Furnishing Metal Shell Piles 14"x.250"		Foot	598	
Driving Piles		Foot	598	
Test Pile Metal Shells		Each	1	
Pile Shoes		Each	13	

For details of Bar Splicers, see sheet 18 of 27.
For details of piles see sheet 19 of 27.

PILE DATA

Type: Metal Shell Piles, 14" x 0.250" with pile shoes
Nominal Required Bearing: 330 Kips
Factored Resistance Available: 180 Kips
Est. Length: 46 Ft
No. Production Piles: 13
No. Test Piles: 1

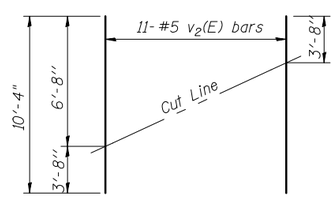

FIELD CUTTING DIAGRAM

Order v2(E) full length. Cut as shown and use remainder of bars in opposite face.

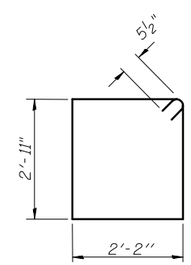

BAR s2(E)

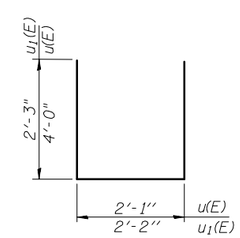

BAR u(E) & u1(E)

FILE NAME = ...\0720226-68481-017-SAbutDtls.dgn	USER NAME = _USER_	DESIGNED - AB	REVISED -
		CHECKED - MJS	REVISED -
	PLOT SCALE = $SCALE$	DRAWN - RMH	REVISED -
THE UPCHURCH GROUP, INC.	PLOT DATE = 3/1/2013 11:27:54 AM	CHECKED - LP	REVISED -

STATE OF ILLINOIS
DEPARTMENT OF TRANSPORTATION

SOUTH ABUTMENT DETAILS
STRUCTURE NO. 072-0226

SHEET NO. 17 OF 27 SHEETS

F.A.U. RTE.	SECTION	COUNTY	TOTAL SHEETS	SHEET NO.
64	(10B) BR	PEORIA	77	45
		CONTRACT NO. 68481		
	ILLINOIS	FED. AID PROJECT		