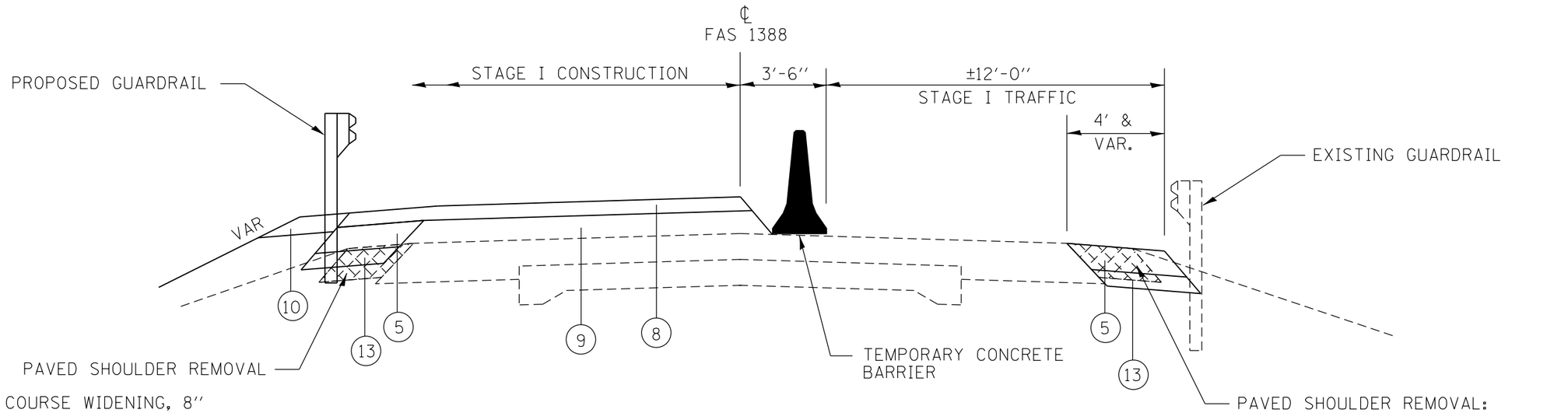

(5) PROPOSED BASE COURSE WIDENING, 8"

(8) PROPOSED POLYERMIZED HOT MIX ASPHALT BINDER COURSE, IL-12.5, N50 2 1/4"

(9) PROPOSED HOT MIX ASPHALT BINDER COURSE, IL-19.0, N50 (VARIABLE DEPTH)

(10) PROPOSED GUARDRAIL AGGREGATE (EROSION CONTROL)

(13) PROPOSED SUBBASE GRANULAR MATERIAL, TYPE B 6"

STAGE 1

NOT TO SCALE

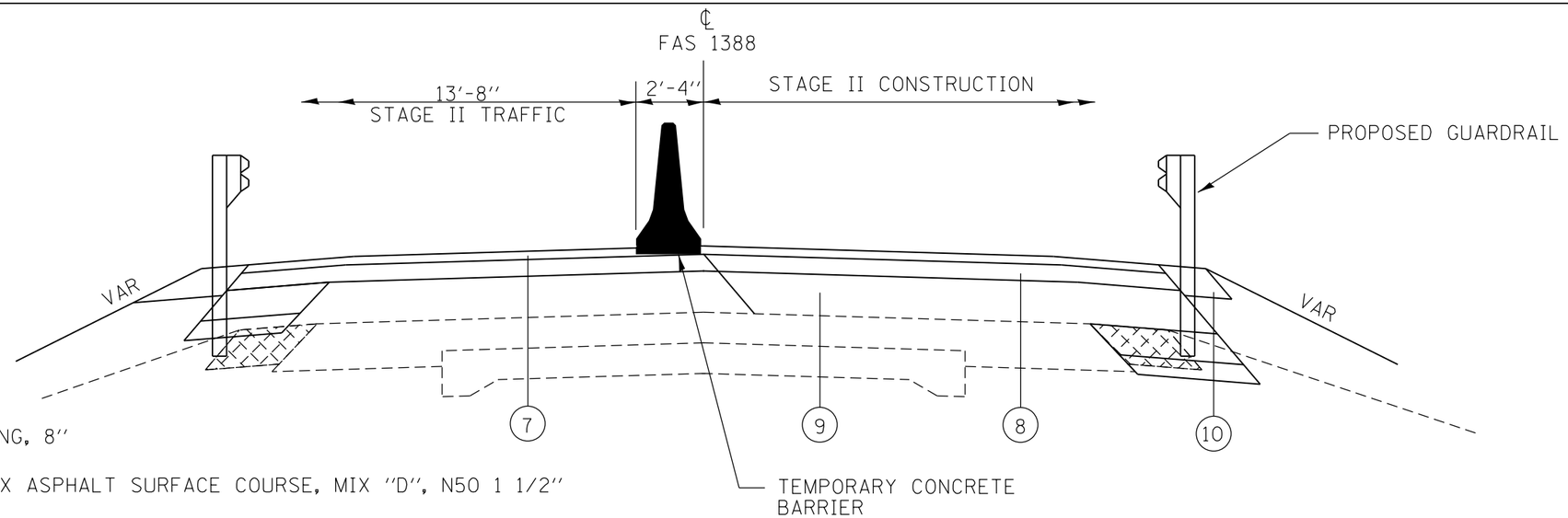

(5) PROPOSED BASE COURSE WIDENING, 8"

(7) PROPOSED POLYMERIZED HOT MIX ASPHALT SURFACE COURSE, MIX "D", N50 1 1/2"

(8) PROPOSED POLYERMIZED HOT MIX ASPHALT BINDER COURSE, IL-12.5, N50 2 1/4"

(9) PROPOSED HOT MIX ASPHALT BINDER COURSE, IL-19.0, N50 (VARIABLE DEPTH)

(10) PROPOSED GUARDRAIL AGGREGATE (EROSION CONTROL)

(13) PROPOSED SUBBASE GRANULAR MATERIAL, TYPE B 6"

STAGE 2

NOT TO SCALE

FILE NAME = P:\Projects\2008 Projects\08379 IL 8 over Kickapoo Creek\CV\CADD Sheets\D468697-sht-staging.dgn	USER NAME = bemery	DESIGNED -	REVISED -	STATE OF ILLINOIS DEPARTMENT OF TRANSPORTATION	STAGING TYPICAL SECTIONS IL 8 OVER KICKAPOO CREEK	F.A.S. RTE.	SECTION	COUNTY	TOTAL SHEETS / SHEET NO.
		DRAWN -	REVISED -			1388	(Z-1D-BR-1)BR	PEORIA	89 / 22
	PLOT SCALE = 100.000 ' / in.	CHECKED -	REVISED -					CONTRACT NO. 68697	
	PLOT DATE = 3/20/2014	DATE -	REVISED -		SCALE: SHEET NO. OF SHEETS STA. TO STA.	FED. ROAD DIST. NO.	ILLINOIS	FED. AID PROJECT	