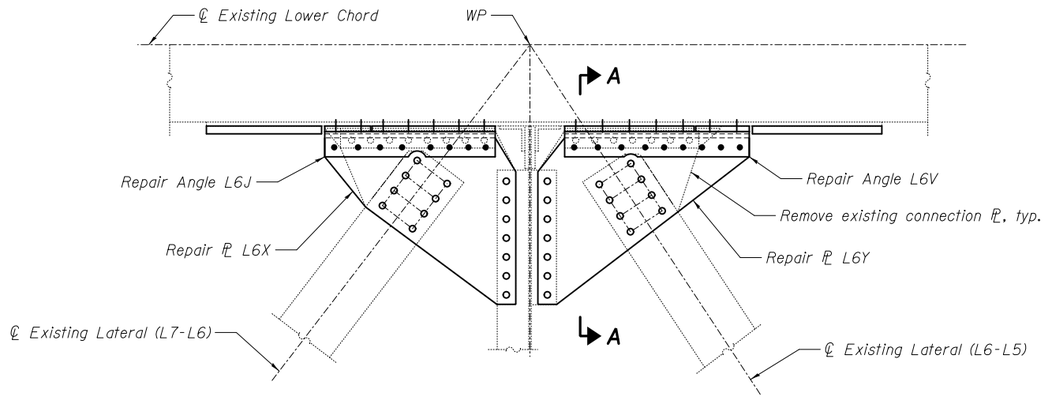

LOWER LATERAL AT PANEL POINT L6N AND L6S
(L6'N AND L6'S SIMILAR)

(Span 9 and Span 11)

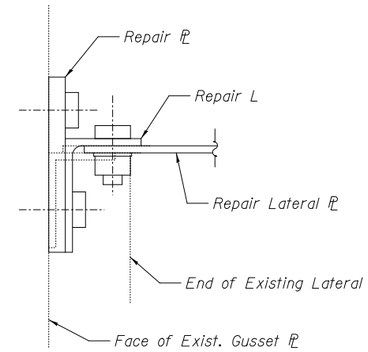

SECTION A-A

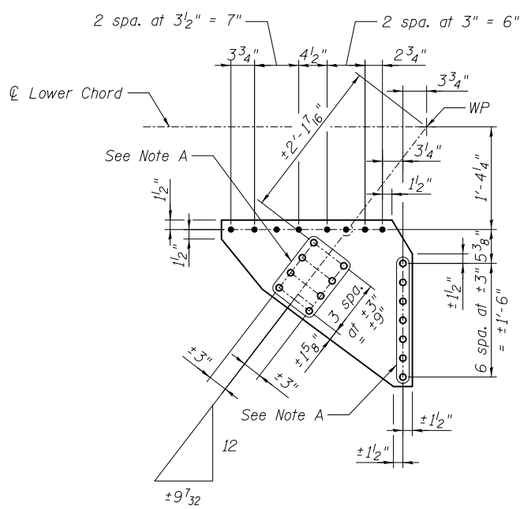

REPAIR ℙ L6X

ℙ ⅜" x 26⅜" x 2'-6¼"

Note: Repair ℙ L6X requires
15/16" ϕ holes for ⅞" ϕ H.S. bolts.

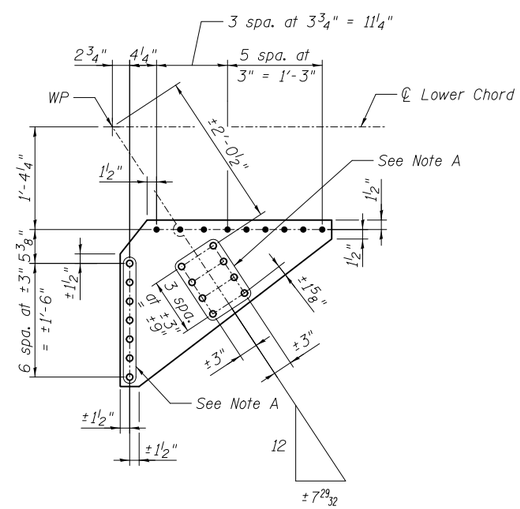

REPAIR ℙ L6Y

ℙ ⅜" x 26⅜" x 2'-9½"

Note: Repair ℙ L6Y requires
15/16" ϕ holes for ⅞" ϕ H.S. bolts.

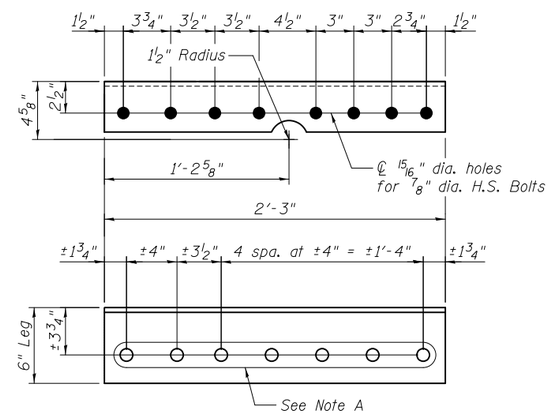

REPAIR ANGLE L6J

L6 x 4 x ⅜ x 2'-3"

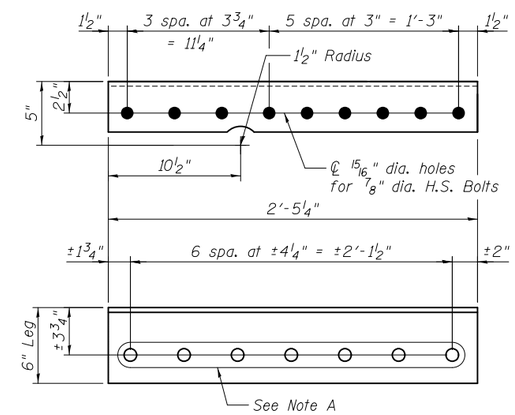

REPAIR ANGLE L6V

L6 x 4 x ⅜ x 2'-5¼"

Note A:
Field drill holes using existing holes as template.
Remainder of holes may be shop or field drilled.

Notes:
All bolted connections shown on this sheet shall be made with 1" dia. H.S. bolts unless otherwise noted.

MODJESKI and MASTERS — Experience great bridges.	USER NAME =	DESIGNED - MEL/YSS	REVISED
		CHECKED - CDB	REVISED
	PLOT SCALE =	DRAWN - AEC	REVISED
	PLOT DATE = 05/09/2014	CHECKED - MEL	REVISED

STATE OF ILLINOIS
DEPARTMENT OF TRANSPORTATION

MAIN SPAN GUSSET PLATE STRENGTHENING – 4A
S.N. 082-6001 MLK BRIDGE OVER MISSISSIPPI RIVER

SHEET NO. S49A OF S138 SHEETS

F.A.P. RTE.	SECTION	COUNTY	TOTAL SHEETS	SHEET NO.
799	1BR, DRS-2	ST. CLAIR	156	67A
		CONTRACT NO. 76B03		
	ILLINOIS FED. AID PROJECT			