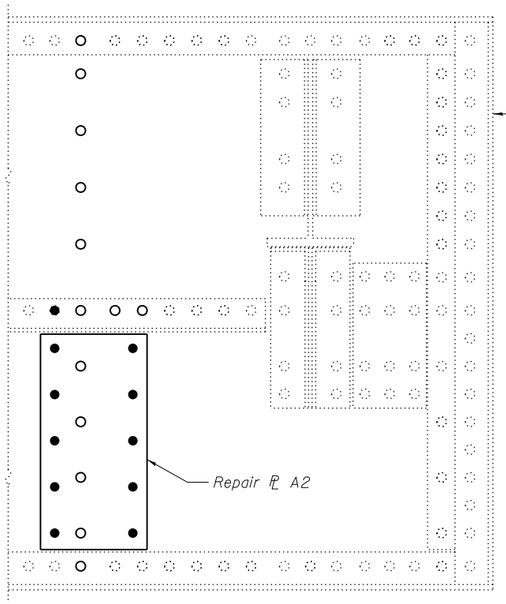

NORTH END AT PANEL POINT L8
EAST FACE
Span 9

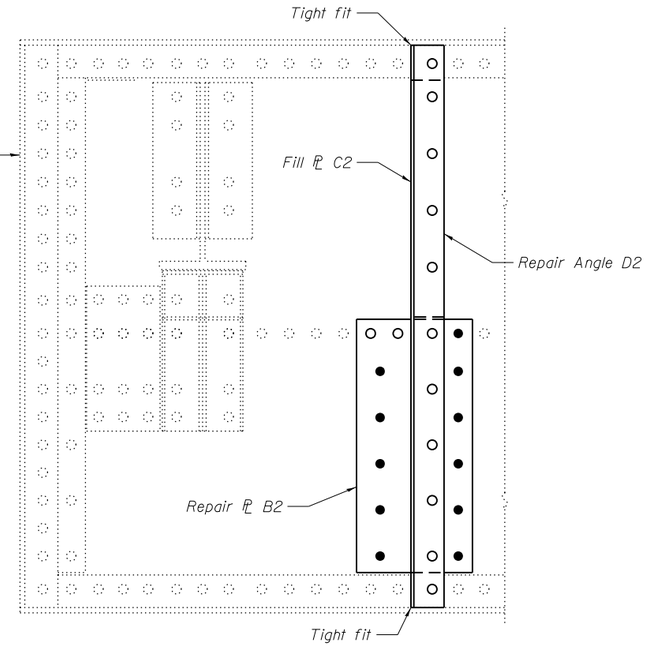

NORTH END AT PANEL POINT L8
WEST FACE
Span 9

FLOORBEAM WEB REPAIRS

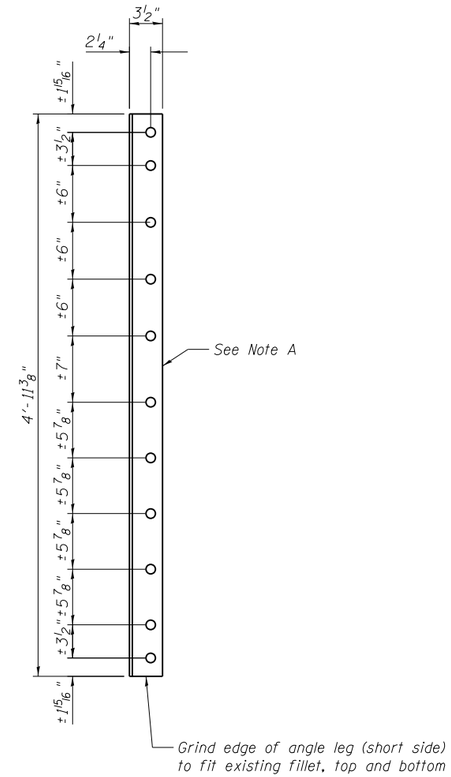

REPAIR ANGLE D2
$L5x3\frac{1}{2}x\frac{5}{16}$ x 4'-11 3/8"

Note A:
Field drill holes using existing holes as template.
Remainder of holes may be shop or field drilled.

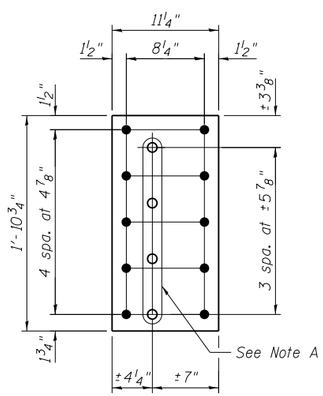

REPAIR PL A2
PL 3/8" x 11¼" x 1'-10¾"

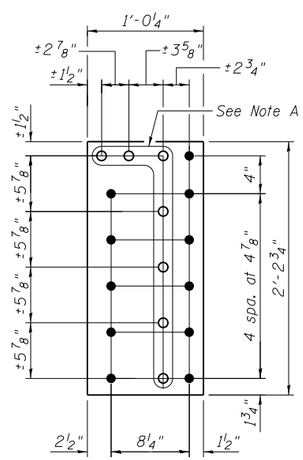

REPAIR PL B2
PL 9/16" x 12¼" x 2'-2¾"

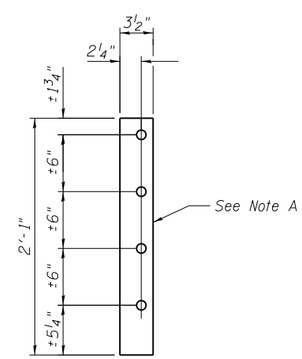

FILL PL C2
PL 9/16" x 3½" x 2'-1"

BILL OF MATERIAL

Item	Unit	Total
Structural Steel Repair	Pound	160

MODJESKI and MASTERS
Experience great bridges.

USER NAME =	DESIGNED - PRC	REVISED
	CHECKED - CDB	REVISED
PLOT SCALE =	DRAWN - PRC	REVISED
PLOT DATE = 05/02/2014	CHECKED - CDB	REVISED

STATE OF ILLINOIS
DEPARTMENT OF TRANSPORTATION

MAIN SPANS FLOORBEAM WEB REPAIRS – 2
S.N. 082-6001 MLK BRIDGE OVER MISSISSIPPI RIVER

SHEET NO. S66 OF S138 SHEETS

F.A.P. RTE.	SECTION	COUNTY	TOTAL SHEETS	SHEET NO.
799	1BR, DRS-2	ST. CLAIR	156	84
		CONTRACT NO. 76B03		
	ILLINOIS	FED. AID PROJECT		