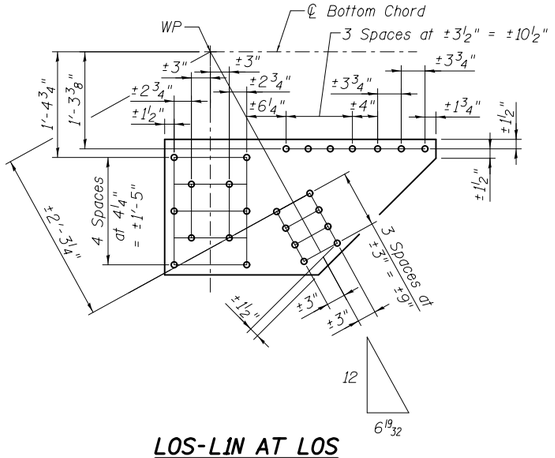

L0S-L1N AT L0S

PL ⅜ x 21½" x 3'-7"

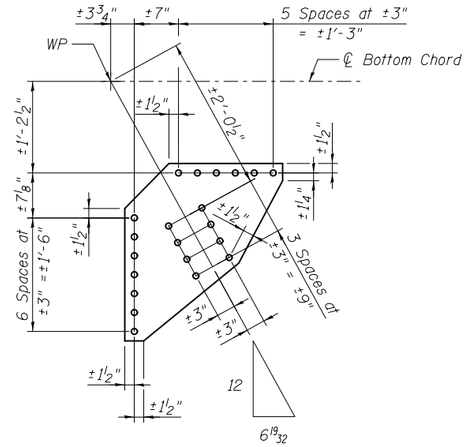

L1N-L2S AT L1N

PL ⅜" x 28¼" x 2'-1"

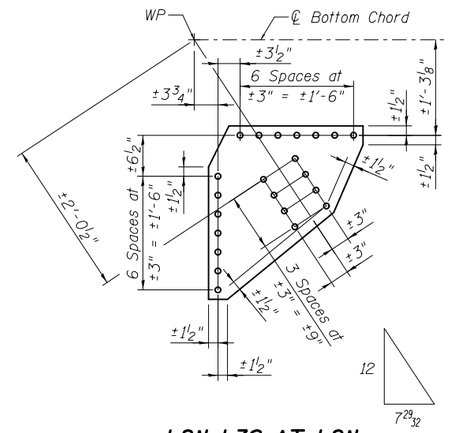

L2N-L3S AT L2N

PL ⅜ x 27½" x 2'-0½"

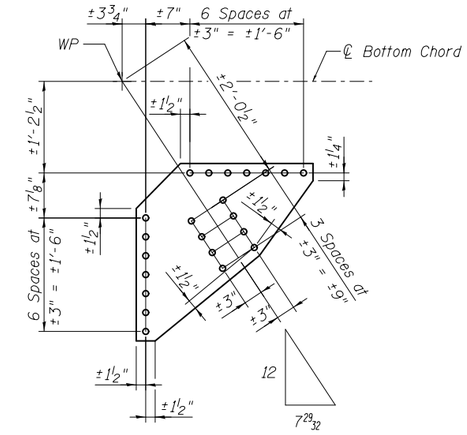

L3N-L4S AT L3N

PL ⅜" x 28¼" x 2'-4"

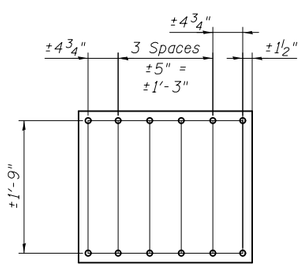

L4N-L5S AT L5S
L5N-L6S AT L6S

PL ⅜ x 27½" x 2'-0"

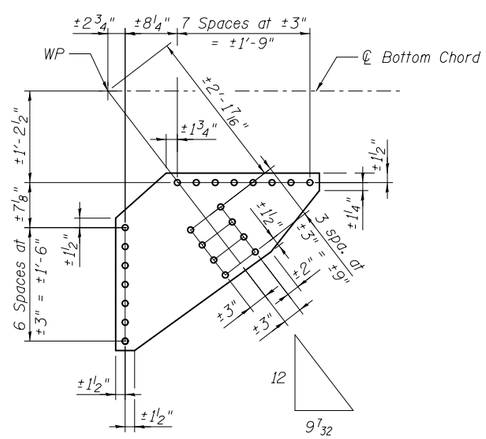

L6N-L7S AT L7S

PL ⅜" x 28¼" x 2'-8½"

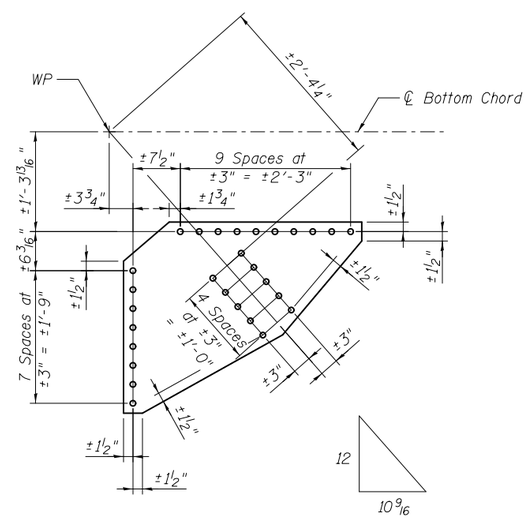

L10S-L11N AT L10S

PL ⅜ x 30¼" x 3'-1¾"

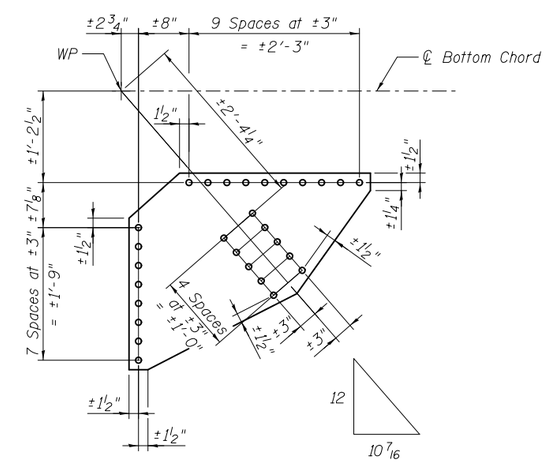

L12N-L13S AT L13S

PL ⅜" x 31¼" x 3'-2"

BILL OF MATERIAL

Item	Unit	Total
Structural Steel Repair	Pound	760

Note:
Field drill holes using existing holes as template.

MODJESKI and MASTERS
Experience great bridges.

USER NAME =	DESIGNED - CDB	REVISED
	CHECKED - AEC	REVISED
PLOT SCALE =	DRAWN - AEC	REVISED
PLOT DATE = 03/20/2014	CHECKED - CDB	REVISED

STATE OF ILLINOIS
DEPARTMENT OF TRANSPORTATION

MAIN SPAN BOTTOM LATERAL CONNECTION PLATE REPLACEMENTS – 1
S.N. 082-6001 MLK BRIDGE OVER MISSISSIPPI RIVER

SHEET NO. S80 OF S138 SHEETS

F.A.P. RTE.	SECTION	COUNTY	TOTAL SHEETS	SHEET NO.
799	1BR, DRS-2	ST. CLAIR	156	98

CONTRACT NO. 76B03

ILLINOIS FED. AID PROJECT