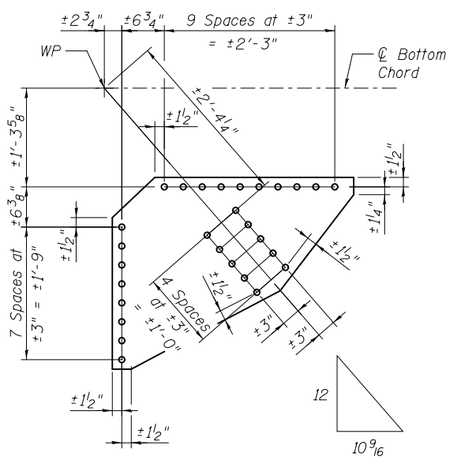

L15N-L16S AT L16S
L16'N-L15'S AT L16'N
PL ⅜" x 30½" x 3'-0¾"

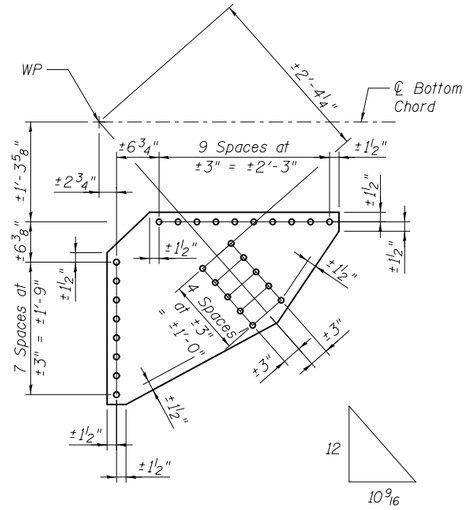

L17N-L18S AT L18S
L18'N-L17'S AT L18'N
PL ⅜ x 30½" x 3'-0¾"

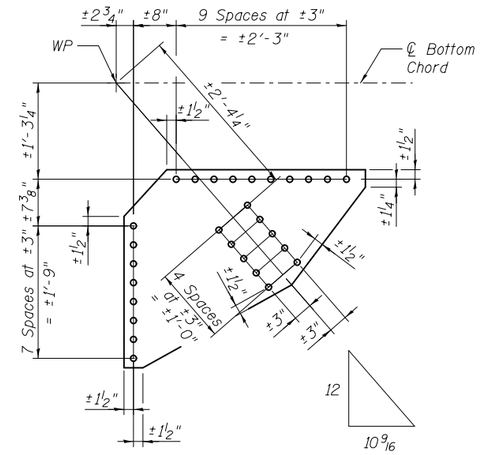

L18N-L19S AT L19S
PL ⅜" x 31⅜" x 3'-2"

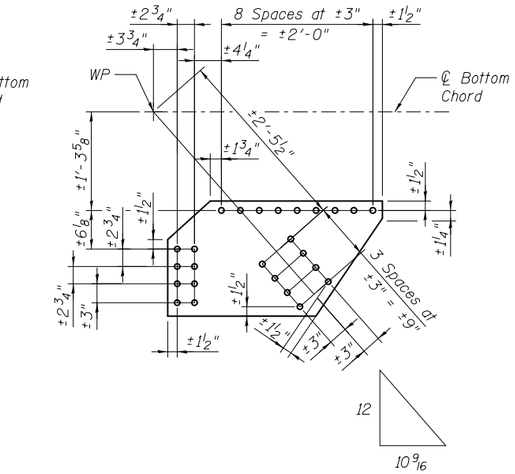

L22'N-L21'S AT L21'S
PL ⅝ x 18¾" x 2'-10"

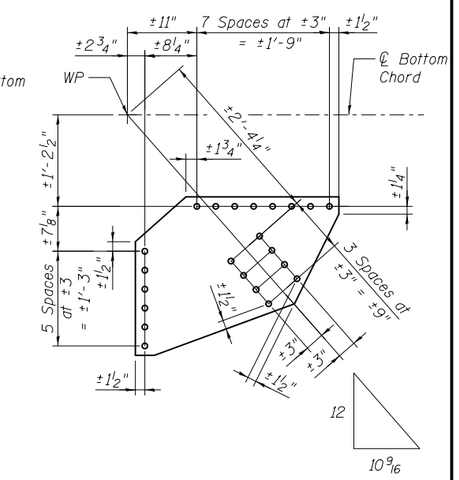

L21'S-L20'N AT L21'S
PL ⅜ x 25½" x 2'-8¼"

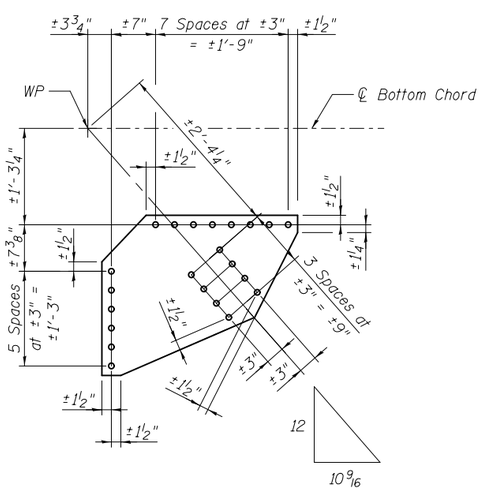

L20'N-L19'S AT L19'S
PL ⅜ x 25½" x 2'-7"

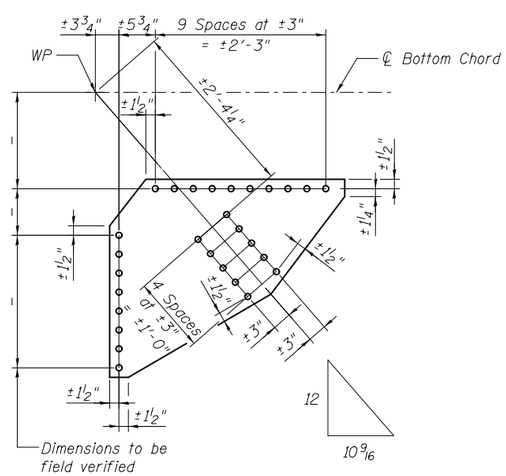

L13'S-L12'N AT L12'N
PL ⅜ x - x 2'-11¾"

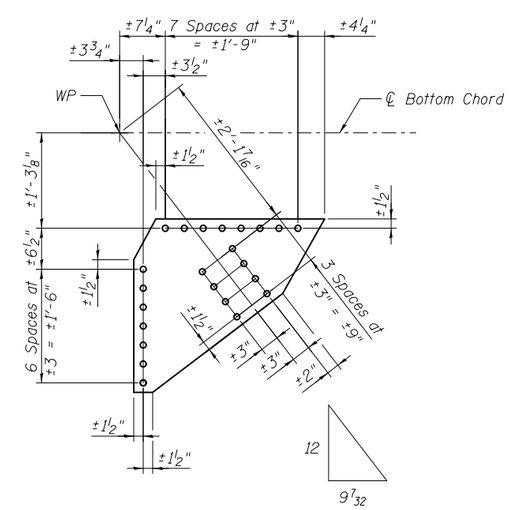

L7'N-L6'S AT L6'S
PL ⅜ x 27½" x 2'-6¼"

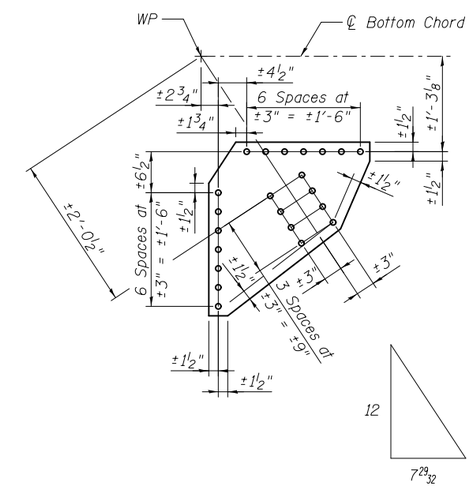

L6'N-L5'S AT L6'N
PL ⅜ x 27½" x 2'-1½"

BILL OF MATERIAL

Item	Unit	Total
Structural Steel Repair	Pound	1050

Note:
Field drill holes using existing holes as template.

USER NAME =	DESIGNED - CDB	REVISED	
	CHECKED - AEC	REVISED	
PLOT SCALE =	DRAWN - AEC	REVISED	
PLOT DATE = 03/20/2014	CHECKED - CDB	REVISED	

MODJESKI and MASTERS
Experience great bridges.

STATE OF ILLINOIS
DEPARTMENT OF TRANSPORTATION

MAIN SPAN BOTTOM LATERAL CONNECTION PLATE REPLACEMENTS – 2
S.N. 082–6001 MLK BRIDGE OVER MISSISSIPPI RIVER

SHEET NO. S81 OF S138 SHEETS

F.A.P. RTE.	SECTION	COUNTY	TOTAL SHEETS	SHEET NO.
799	1BR, DRS-2	ST. CLAIR	156	99
		CONTRACT NO. 76B03		
		ILLINOIS FED. AID PROJECT		