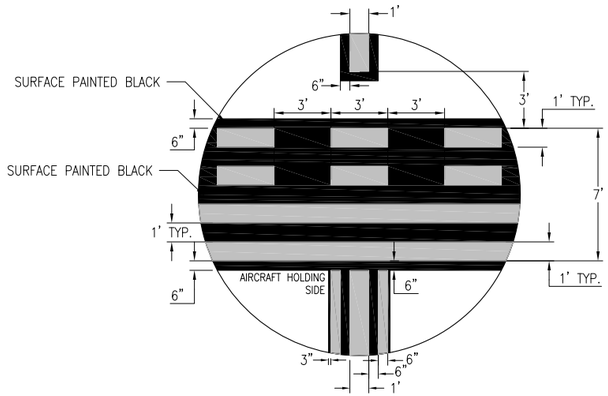

RUNWAY HOLDING POSITION DETAIL
"NOT TO SCALE"

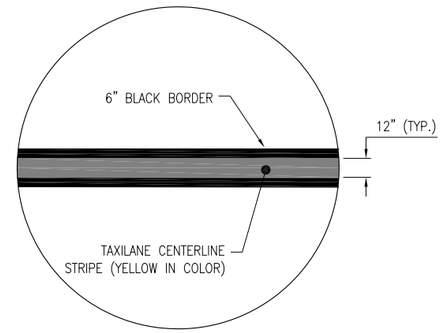

TAXILWAY CENTERLINE DETAIL
NOT TO SCALE

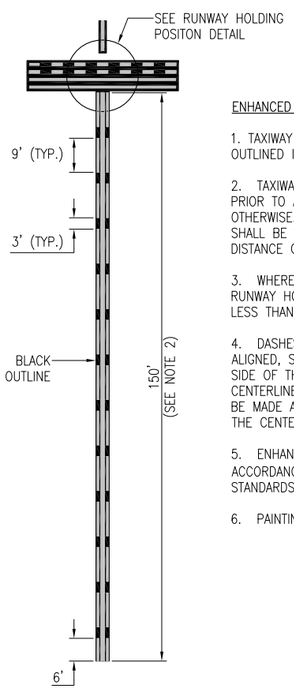

ENHANCED TAXIWAY CENTERLINE MARKING NOTES:

1. TAXIWAY CENTERLINE MARKINGS SHALL BE YELLOW IN COLOR AND OUTLINED IN BLACK.

2. TAXIWAY CENTERLINE MARKINGS SHALL BE ENHANCED FOR 150–FT PRIOR TO A RUNWAY HOLDING POSITION MARKING, UNLESS NOTED OTHERWISE. FOR A CURVED TAXIWAY CENTERLINE, THIS DISTANCE SHALL BE MEASURED ALONG THE CENTERLINE BEING ENHANCED TO A DISTANCE OF 150–FT.

3. WHERE TWO TAXIWAY CENTERLINES CONVERGE AT OR BEFORE THE RUNWAY HOLDING POSITION MARKING, PARTIAL INNER DASHED LINES LESS THAN 5 FEET AT THE POINT OF CONVERGENCE MAY BE OMITTED.

4. DASHES ON EITHER SIDE OF THE TAXIWAY CENTERLINE MUST BE ALIGNED, STARTING AND STOPPING WITH THE DASHES ON THE OPPOSITE SIDE OF THE CENTERLINE. TO ACCOMPLISH THIS FOR CURVED TAXIWAY CENTERLINES, THE MEASUREMENTS FOR THE DASHES AND GAPS SHALL BE MADE AT THE CENTERLINE AND EXTENDED PERPENDICULAR FROM THE CENTERLINE TO OBTAIN THE LOCATIONS OF THE DASHES.

5. ENHANCED TAXIWAY CENTERLINE MARKINGS SHALL BE IN ACCORDANCE WITH THE CURRENT EDITION OF FAA AC 150/5340–1, STANDARDS FOR AIRPORT MARKING.

6. PAINTING OF HOLDING POSITION MARKINGS IS NOT REQUIRED.

ENHANCED TAXIWAY CENTERLINE MARKING DETAIL
NOT TO SCALE

STORM WATER POLLUTION PREVENTION NOTES

1. THE CONTRACTOR SHALL IMPLEMENT ALL PROVISIONS OF THE CONTRACT DOCUMENTS TO ASSURE THAT STORM WATER POLLUTION PREVENTION ITEMS ARE CONSTRUCTED AND MAINTAINED IN A TIMELY MANNER. SEDIMENTATION MUST NOT BE TRANSPORTED OFF THE CONSTRUCTION SITE. PERMANENT DRAINAGE FEATURES AND VEGETATIVE MEASURES SHALL BE PROVIDED AS SOON AS POSSIBLE.

2. THE CONTRACTOR SHALL BE REQUIRED TO IMPLEMENT AND MAINTAIN STORM WATER POLLUTION PREVENTION PRACTICES AND MEASURES PRIOR TO THE STRIPPING OF EXISTING VEGETATION WHERE EVER POSSIBLE AND AS SOON AS CONSTRUCTION PERMITS IN OTHER AREAS. POLLUTION CONTROL MEASURES SHALL BE IN ACCORDANCE WITH THE CONTRACT DOCUMENTS, INCLUDING THESE CONSTRUCTION PLANS, AND WITH STANDARDS AND SPECIFICATIONS FOR SOIL EROSION AND SEDIMENT CONTROL, ILLINOIS ENVIRONMENTAL PROTECTION AGENCY, CURRENT ISSUE. THE CONTRACTOR SHALL ADJUST HIS OPERATIONS AND IMPLEMENT POLLUTION CONTROL MEASURES SO THAT NO RUNOFF FROM STRIPPED AREAS WILL LEAVE THE CONSTRUCTION SITE OTHER THAN THROUGH SEDIMENT TRAPS OR OTHER SUITABLE CONTROL MEASURES.

3. POLLUTION CONTROL ITEMS SHALL BE PROVIDED AS NOTED ON THE STORM WATER POLLUTION PREVENTION PLAN AND IN THE STORM WATER POLLUTION PREVENTION DETAILS AND AS DIRECTED BY THE ENGINEER. THE LIMITS OF SUCH MEASURES SHALL BE STAKED BY THE CONTRACTOR PRIOR TO THE COMMENCEMENT OF CONSTRUCTION. SUCH LIMITS MAY BE ADJUSTED BY THE ENGINEER TO ACCOUNT FOR ACTUAL SITE CONDITIONS EXPERIENCED DURING CONSTRUCTION. ADDITIONAL COMPENSATION FOR MEASURES EXCEEDING THE PLAN QUANTITIES WILL BE PAID FOR AT THE CONTRACT UNIT PRICE FOR EACH ITEM.

4. THE CONTRACTOR IS TO MAINTAIN AND ADJUST, REPAIR OR REPLACE ALL POLLUTION PREVENTION MEASURES AS REQUIRED OR AS DIRECTED BY THE ENGINEER UNTIL PERMANENT VEGETATION HAS BEEN ESTABLISHED. MAINTENANCE OF POLLUTION CONTROL MEASURES IS TO BE PROVIDED AT NO ADDITIONAL COST TO THE CONTRACT.

HANSON
Engineering | Planning | Allied Services

Offices Nationwide
www.hanson-inc.com

Hanson Professional Services Inc.
1525 S. 6th Street
Springfield, IL 62703
phone: 217-788-2450
fax: 217-788-2503

Illinois Licensed
Professional Service Corporation
#184-001084

MT. VERNON AIRPORT
MT. VERNON, ILLINOIS

100 Aviation Dr
Mt. Vernon, IL 62864

STATE OF ILLINOIS
BARRY S. STOLZ
062-057281
LICENSED PROFESSIONAL ENGINEER
EXP. 11/30/15
5/9/14

REHABILITATE
TAXIWAYS B & E

IDA No: MVN-4326

Contract No. MV060

NO.	DATE	DESCRIPTION		
		LAY	DWN	REV

ISSUE: MAY 9, 2014
PROJECT NO: 13A0077D
CAD FILE: C-581-DET.DWG
LAYOUT BY: JRH 04/04/2014
DRAWN BY: JRH 04/04/2014
REVIEWED BY: JSL 04/21/2014

© Copyright Hanson Professional Services Inc. 2013

SHEET TITLE

MISCELLANEOUS
DETAILS AND NOTES

MAY 12, 2014 11:33 AM STOLZ01547
pw:\\sgi-svr306.hanson.com:Hanson Projects\Documents\13Jobs\13A0077\13A0077D\CADAirport\Sheet\C-581-SWP