06-13-2025 LETTING ITEM 134

F.A.P RTE	SECTION	COUNTY	TOTAL SHEETS	SHEET NO
132/869	1CR-1; 103CR-1, 103CR-2	SALINE	59	1
		ILLINOIS	CONTRACT NO. 78399	

STATE OF ILLINOIS
DEPARTMENT OF TRANSPORTATION

PROPOSED HIGHWAY PLANS

FAP ROUTE 132/869 (IL 145 & 34)
SECTION 1CR-1; 103CR-1; 103CR-2

CULVERT REPLACEMENTS
SALINE COUNTY

C-99-023-14

D-99-019-14

LOCATION OF SECTION INDICATED THUS: -

FOR INDEX OF SHEETS, SEE SHEET NO. 3

FOR SUMMARY OF QUANTITIES, SEE SHEET NO. 4-7

TRAFFIC DATA

SN 083-7000 & SN 083-7001

FUNCTIONAL CLASSIFICATION: MINOR ARTERIAL

ADT:	2140 (2025)
PV:	88%
TRUCKS:	12%
DESIGN SPEED:	55 MPH
POSTED SPEED:	55 MPH

SN 083-7022

FUNCTIONAL CLASSIFICATION: MINOR ARTERIAL

ADT:	4180 (2025)
PV:	94%
TRUCKS:	6%
DESIGN SPEED:	55 MPH
POSTED SPEED:	55 MPH

TOWNSHIPS

TATE
INDEPENDENCE

DESIGN DESIGNATION : N/A

COORDINATE SYSTEM : NAD 1983 STATE PLANE ILLINOIS EAST FIPS 1201 FEET (HORIZONTAL) NAVD88 (VERTICAL)

SN 083-7108
IL 34 (FAP 869) OVER CREEK
10' S X 5' R CULVERT
NO SKEW

SN 083-7107
IL 34 (FAP 869) OVER CREEK
10' S X 4' R CULVERT
NO SKEW

SN 083-7022
IL 145/34 (FAP 132/869) OVER CREEK
5' S X 5' R CULVERT
NO SKEW

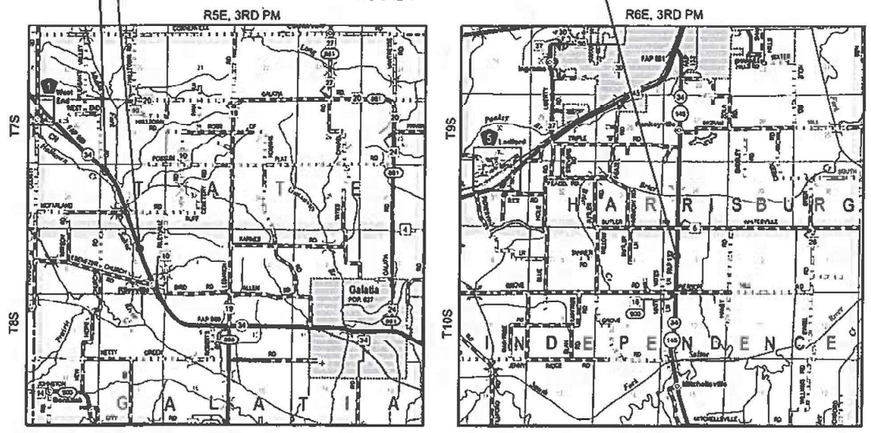

LOCATION MAP

J.U.L.I.E.
JOINT UTILITY LOCATION INFORMATION FOR EXCAVATION
1-800-892-0123
OR 811

PROJECT ENGINEER: EHREN KIRBY
PROJECT DESIGNER: ESCA CONSULTANTS, INC.

CONTRACT NO. 78399

ERIC L. HENKEL
062-054190
LICENSED PROFESSIONAL ENGINEER
ILLINOIS

EXPIRES 11-30-25

SIGNATURE

03-03-2025
DATE

ESCA CONSULTANTS, INC.
CIVIL & STRUCTURAL ENGINEERS

IL LICENSE NO. 184000883-0006
JOB NO. 1423.07

GROSS LENGTH = 108,240 FT. = 20.5 MILES
NET LENGTH = 119 FT. = 0.023 MILES

STATE OF ILLINOIS
DEPARTMENT OF TRANSPORTATION

SUBMITTED March 12 20 25
Zora S. Romano
REGION FIVE ENGINEER

May 9 20 25
ENGINEER OF DESIGN AND ENVIRONMENT

May 9 20 25
DIRECTOR OF HIGHWAYS PROJECT IMPLEMENTATION

PRINTED BY THE AUTHORITY OF THE STATE OF ILLINOIS

REV - MS

PREPARED BY: _____
DISTRICT STUDIES & PLANS ENGINEER

EXAMINED BY: _____
DISTRICT LAND ACQUISITION ENGINEER

EXAMINED BY: _____
DISTRICT PROGRAM DEVELOPMENT ENGINEER

EXAMINED BY: _____
DISTRICT OPERATIONS ENGINEER

EXAMINED BY: _____
DISTRICT PROJECT IMPLEMENTATION ENGINEER

EXAMINED BY: _____
DISTRICT CONSTRUCTION ENGINEER

EXAMINED BY: _____
DISTRICT MATERIALS ENGINEER

MODEL: Signatures Sheet
FILE NAME: Y:\IDOT\1423-07_78399\78399_DESIGN\CADD\CAD_Sheets Common\D978399-sht-sign.sign

ESCA CONSULTANTS, INC.

USER NAME = atn	DESIGNED - ATN	REVISED -	
ESCA PROJECT NO. = 1423.07	DRAWN - ATN	REVISED -	
	CHECKED - ELH	REVISED -	
PLOT DATE = 2/25/2025	DATE - 01/25	REVISED -	

STATE OF ILLINOIS
DEPARTMENT OF TRANSPORTATION

SIGNATURE SHEET

SCALE: N/A | SHEET 1 OF 1 SHEETS | STA. | TO STA.

F.A.P. RTE.	SECTION	COUNTY	TOTAL SHEETS	SHEET NO.
132/869	1CR-1; 103CR-1; 103CR-2	SALINE	59	2
		CONTRACT NO. 78399		
		ILLINOIS FED. AID PROJECT		

LIST OF ILLINOIS DOT HIGHWAY STANDARDS

STANDARD NO.	DESCRIPTION
000001-08	STANDARD SYMBOLS, ABBREVIATIONS, AND PATTERNS
001001-02	AREAS OF REINFORCEMENT BARS
001006	DECIMAL OF AN INCH AND OF A FOOT
280001-07	TEMPORARY EROSION CONTROL SYSTEMS
420001-10	PAVEMENT JOINTS
420701-03	PAVEMENT WELDED WIRE REINFORCEMENT
483001-06	PCC SHOULDER
666001-01	RIGHT OF WAY MARKERS
701001-02	OFF-RD OPERATIONS, 2L, 2W, MORE THAN 15' (4.5 m) AWAY
701006-05	OFF-RD OPERATIONS, 2L, 2W, 15' (4.5 m) TO 24" (600 mm) FROM PAVEMENT EDGE
701011-04	OFF-RD MOVING OPERATIONS 2L, 2W, DAY ONLY
701201-05	LANE CLOSURE, 2L 2W, DAY ONLY, FOR SPEEDS ≥ 45 MPH
701301-04	LANE CLOSURE, 2L, 2W, SHORT TIME OPERATIONS
701311-03	LANE CLOSURE 2L, 2W MOVING OPERATIONS-DAY ONLY
701316-14	LANE CLOSURE 2L, 2W BRIDGE REPAIR
701901-10	TRAFFIC CONTROL DEVICES
720001-01	SIGN PANEL MOUNTING DETAILS
720006-04	SIGN PANEL ERECTION DETAILS
780001-05	TYPICAL PAVEMENT MARKINGS
862001-01	UNINTERRUPTABLE POWER SUPPLY
BLR21-9	TYPICAL APPLICATION OF TRAFFIC CONTROL DEVICES FOR CONSTRUCTION OF RURAL LOCAL HIGHWAYS

GENERAL NOTES

1. FACTORS USED FOR ESTIMATING THE PLAN QUANTITIES ARE AS FOLLOWS AND SHALL NOT BE USED FOR THE BASIS OF FINAL QUANTITIES

   ALL AGGREGATE 2.05 TONS/CU YD

   ROCK FILL 1.50 TONS/CU YD

2. AT ALL LOCATIONS WHERE THE PROPOSED CONCRETE PAVEMENT JOINS AN EXISTING HOT-MIX ASPHALT OR CONCRETE PAVEMENT, A FULL DEPTH SAWED JOINT SHALL BE CONSTRUCTED. THE COST OF THIS JOINT WILL BE INCLUDED IN THE COST OF THE TYPE OF PAVEMENT BEING CONSTRUCTED.

3. REMOVAL OF ABANDONED UTILITIES SHALL BE INCLUDED IN THE COST OF EARTH EXCAVATION.

4. THE ALGREBRAIC DIFFERENCE BETWEEN THE PAVEMENT AND SHOULDER SLOPES SHALL NOT EXCEED 8%. THE SHOULDER ON THE OUTSIDE OF THE SUPERELEVATED CURVES SHALL BE FLATTENED ACCORDINGLY.

5. IF THE CONTRACTOR ELECTS TO USE CAST-IN-PLACE CONSTRUCTION FOR THE END SECTIONS, ANY TEMPORARY SOIL RETENTION AND TRAFFIC CONTROL NECESSARY FOR STAGE CONSTRUCTION THAT ARE NOT SHOWN IN THESE PLANS WILL BE AT THE CONTRACTOR'S EXPENSE.

COMMITMENTS

1. NONE, AS OF FEBRUARY 7, 2025.

INDEX OF SHEETS

SUMMARY OF QUANTITIES

CODE NO.	ITEM	UNIT	100% STATE TOTAL QUANTITY	STRUCTURE	STRUCTURE	STRUCTURE
				CONSTRUCTION CODE		
				0004	0004	0004
				S.N. 083-7107	S.N. 083-7108	S.N. 083-7022
20100110	TREE REMOVAL (6 TO 15 UNITS DIAMETER)	UNIT	75	69	6	
20100210	TREE REMOVAL (OVER 15 UNITS DIAMETER)	UNIT	112	42	70	
20200100	EARTH EXCAVATION	CU YD	935	250	305	380
20700220	POROUS GRANULAR EMBANKMENT	CU YD	511	130	167	214
25000200	SEEDING, CLASS 2	ACRE	0.25	0.05	0.05	0.15
25000350	SEEDING, CLASS 7	ACRE	0.25	0.05	0.05	0.15
25000400	NITROGEN FERTILIZER NUTRIENT	POUND	25	5	5	15
25000500	PHOSPHORUS FERTILIZER NUTRIENT	POUND	25	5	5	15
25000600	POTASSIUM FERTILIZER NUTRIENT	POUND	25	5	5	15
25000700	AGRICULTURAL GROUND LIMESTONE	TON	0.5	0.1	0.1	0.3
25100630	EROSION CONTROL BLANKET	SQ YD	344	78	82	184
28000250	TEMPORARY EROSION CONTROL SEEDING	POUND	50	10	10	30
28000400	PERIMETER EROSION BARRIER	FOOT	475	137	135	203
28100107	STONE RIPRAP, CLASS A4	SQ YD	223	45	42	136

REV - MS

MODEL: Summary Of Quantities Sheet 1
FILE NAME: Y:\IDOT\1423-07_78399\78399 DESIGN\CADD\CAD_Sheets Common\D978399-sht-SOQ.dgn

ESCA CONSULTANTS, INC.
CIVIL & STRUCTURAL ENGINEERS

USER NAME = atn	DESIGNED - ATN	REVISED -	
ESCA PROJECT NO. = 1423.07	DRAWN - ATN	REVISED -	
	CHECKED - ELH	REVISED -	
PLOT DATE = 2/25/2025	DATE - 02/25	REVISED -	

STATE OF ILLINOIS
DEPARTMENT OF TRANSPORTATION

SUMMARY OF QUANTITIES

SCALE: N/A | SHEET 1 OF 4 SHEETS | STA. | TO STA.

F.A.P. RTE.	SECTION	COUNTY	TOTAL SHEETS	SHEET NO.
132/869	1CR-1; 103CR-1; 103CR-2	SALINE	59	4

CONTRACT NO. 78399

ILLINOIS | FED. AID PROJECT

SUMMARY OF QUANTITIES

CODE NO.	ITEM	UNIT	100% STATE TOTAL QUANTITY	STRUCTURE	STRUCTURE	STRUCTURE
				CONSTRUCTION CODE		
				0004	0004	0004
				S.N. 083-7107	S.N. 083-7108	S.N. 083-7022
28200200	FILTER FABRIC	SQ YD	197	36	30	131
42000060	WELDED WIRE REINFORCEMENT	SQ YD	345	96	104	145
42000500	PORTLAND CEMENT CONCRETE PAVEMENT 10"	SQ YD	345	96	104	145
42001300	PROTECTIVE COAT	SQ YD	447	118	128	201
44000100	PAVEMENT REMOVAL	SQ YD	345	96	104	145
48300500	PORTLAND CEMENT CONCRETE SHOULDERS 10"	SQ YD	102	22	24	56
50100300	REMOVAL OF EXISTING STRUCTURES NO. 1	EACH	1	1		
50100400	REMOVAL OF EXISTING STRUCTURES NO. 2	EACH	1		1	
50100500	REMOVAL OF EXISTING STRUCTURES NO. 3	EACH	1			1
50102400	CONCRETE REMOVAL	CU YD	16			16
50200450	REMOVAL AND DISPOSAL OF UNSUITABLE MATERIAL FOR STRUCTURES	CU YD	187	63	67	57
50800205	REINFORCEMENT BARS, EPOXY COATED	POUND	1640			1640
54001001	BOX CULVERT END SECTIONS, CULVERT NO. 1	EACH	2	2		
54001002	BOX CULVERT END SECTIONS, CULVERT NO. 2	EACH	2		2	

REV - MS

MODEL: Summary Of Quantities Sheet 2
FILE NAME: Y:\IDOT\1423-07_78399\78399 DESIGN\CADD\CAD_Sheets Common\D978399-sht-SOQ.dgn

ESCA CONSULTANTS, INC.

USER NAME = atn	DESIGNED - ATN	REVISED -	
ESCA PROJECT NO. = 1423.07	DRAWN - ATN	REVISED -	
	CHECKED - ELH	REVISED -	
PLOT DATE = 2/25/2025	DATE - 02/25	REVISED -	

STATE OF ILLINOIS
DEPARTMENT OF TRANSPORTATION

SUMMARY OF QUANTITIES

SCALE: N/A | SHEET 2 OF 4 SHEETS | STA. | TO STA.

F.A.P. RTE.	SECTION	COUNTY	TOTAL SHEETS	SHEET NO.
132/869	1CR-1; 103CR-1; 103CR-2	SALINE	59	5
		CONTRACT NO. 78399		
		ILLINOIS	FED. AID PROJECT	

SUMMARY OF QUANTITIES

CODE NO.	ITEM	UNIT	100% STATE TOTAL QUANTITY	STRUCTURE	STRUCTURE	STRUCTURE
				CONSTRUCTION CODE		
				0004	0004	0004
				S.N. 083-7107	S.N. 083-7108	S.N. 083-7022
54001003	BOX CULVERT END SECTIONS, CULVERT NO. 3	EACH	1			1
54003000	CONCRETE BOX CULVERTS	CU YD	9.5			9.5
54010505	PRECAST CONCRETE BOX CULVERTS 5' X 5'	FOOT	57			57
54011004	PRECAST CONCRETE BOX CULVERTS 10' X 4'	FOOT	37	37		
54011005	PRECAST CONCRETE BOX CULVERTS 10' X 5'	FOOT	37		37	
59100100	GEOCOMPOSITE WALL DRAIN	SQ YD	126	63	63	
66600105	FURNISHING AND ERECTING RIGHT OF WAY MARKERS	EACH	6			6
67000400	ENGINEER'S FIELD OFFICE, TYPE A	CAL MO	6	2	2	2
67100100	MOBILIZATION	L SUM	1	0.3	0.3	0.4
70100100	TRAFFIC CONTROL AND PROTECTION, STANDARD 701316	EACH	1			1
70100450	TRAFFIC CONTROL AND PROTECTION, STANDARD 701201	L SUM	1	0.3	0.3	0.4
70103815	TRAFFIC CONTROL SURVEILLANCE	CAL DA	11	1.5	1.5	8
70106500	TEMPORARY BRIDGE TRAFFIC SIGNALS	EACH	1			1
70106700	TEMPORARY RUMBLE STRIPS	EACH	6			6

REV - MS

MODEL: Summary Of Quantities Sheet 3
FILE NAME: Y:\IDOT\1423-07_78399\78399 DESIGN\CADD\CAD_Sheets Common\D978399-sht-SOQ.dgn

ESCA CONSULTANTS, INC.

USER NAME = atn	DESIGNED - ATN	REVISED -	
ESCA PROJECT NO. = 1423.07	DRAWN - ATN	REVISED -	
	CHECKED - ELH	REVISED -	
PLOT DATE = 2/25/2025	DATE - 02/25	REVISED -	

STATE OF ILLINOIS
DEPARTMENT OF TRANSPORTATION

SUMMARY OF QUANTITIES

SCALE: N/A | SHEET 3 OF 4 SHEETS | STA. | TO STA.

F.A.P. RTE.	SECTION	COUNTY	TOTAL SHEETS	SHEET NO.
132/869	1CR-1; 103CR-1; 103CR-2	SALINE	59	6

CONTRACT NO. 78399

ILLINOIS | FED. AID PROJECT

SUMMARY OF QUANTITIES

	CODE NO.	ITEM	UNIT	100% STATE TOTAL QUANTITY	STRUCTURE	STRUCTURE	STRUCTURE
					CONSTRUCTION CODE		
					0004	0004	0004
					S.N. 083-7107	S.N. 083-7108	S.N. 083-7022
	70107025	CHANGEABLE MESSAGE SIGN	CAL DA	102	34	34	34
*	78001110	PAINT PAVEMENT MARKING - LINE 4"	FOOT	738	86	92	560
	78300201	PAVEMENT MARKING REMOVAL - GRINDING	SQ FT	148			148
*	86200300	UNINTERRUPTABLE POWER SUPPLY, EXTENDED	EACH	1			1
	X5810103	MEMBRANE WATERPROOFING SYSTEM FOR BURIED STRUCTURES	SQ YD	126	63	63	
	X7011800	TRAFFIC CONTROL AND PROTECTION, STANDARD BLR 21	L SUM	1	0.3	0.3	0.4
	Z0013798	CONSTRUCTION LAYOUT	L SUM	1	0.3	0.3	0.4
	Z0016702	DETOUR SIGNING	L SUM	1	0.3	0.3	0.4
*	Z0054517	ROCK FILL - FOUNDATION	TON	280	94	100	86

* SPECIALTY ITEM

REV - MS

MODEL: Summary Of Quantities Sheet 4
FILE NAME: Y:\IDOT\1423-07_78399\78399 DESIGN\CADD\CAD_Sheets Common\D978399-sht-SOQ.dgn

ESCA CONSULTANTS, INC. CIVIL & STRUCTURAL ENGINEERS

USER NAME = atn	DESIGNED - ATN	REVISED -	
ESCA PROJECT NO. = 1423.07	DRAWN - ATN	REVISED -	
	CHECKED - ELH	REVISED -	
PLOT DATE = 2/25/2025	DATE - 02/25	REVISED -	

STATE OF ILLINOIS
DEPARTMENT OF TRANSPORTATION

SUMMARY OF QUANTITIES

SCALE: N/A | SHEET 4 OF 4 SHEETS | STA. | TO STA.

F.A.P. RTE.	SECTION	COUNTY	TOTAL SHEETS	SHEET NO.
132/869	1CR-1; 103CR-1; 103CR-2	SALINE	59	7

CONTRACT NO. 78399

ILLINOIS | FED. AID PROJECT

EARTHWORK SCHEDULE

STA	TO	STA	EARTH EXCAVATION	AVERAGE SHRINKAGE FACTOR	EARTH EXCAVATION (ADJUSTED)	EMBANKMENT	EARTHWORK BALANCE: EXCAVATION REQUIRED TO COMPLETE	EARTHWORK BALANCE: EXCESS EXCAVATION	FURNISHED EXCAVATION	REMARKS
			CU YD	%	CU YD	CU YD	CU YD	CU YD	CU YD	
SN 083-7107										
779+49.0 RT		779+82.0 RT	6	25	5	5			0	SN 083-7107 RIGHT
779+49.0 LT		779+82.0 LT	14	25	10	12	2		2	SN 083-7107 LEFT
779+49.0		779+57.67	30	25	23			23	-23	SN 083-7107 NORTH EXCAVATION
779+57.67		779+73.33	150	25	113			113	-113	SN 083-7107 CULVERT EXCAVATION
779+73.33		779+82.00	30	25	23			23	-23	SN 083-7107 SOUTH EXCAVATION
779+57.67		779+73.33	20	25	15			15	-15	SN 083-7107 RIPRAP EXCAVATION
SN 083-7108										
828+58.0 RT		828+94.0 RT	10	25	8	9	1		1	SN 083-7108 RIGHT
828+58.0 LT		828+94.0 LT	10	25	8	7		1	-1	SN 083-7108 LEFT
828+58.00		828+68.17	40	25	30			30	-30	SN 083-7108 NORTH EXCAVATION
828+68.17		828+83.33	200	25	150			150	-150	SN 083-7108 CULVERT EXCAVATION
828+83.33		828+94.00	40	25	30			30	-30	SN 083-7108 SOUTH EXCAVATION
828+68.17		828+83.33	5	25	4			4	-4	SN 083-7108 RIPRAP EXCAVATION
SN 083-7022										
152+98 RT		153+48 RT	15	25	11	10		1	-1	SN 083-7022 RIGHT
152+98 LT		153+48 LT	25	25	19	10		9	-9	SN 083-7022 LEFT
152+98.00		153+17.60	60	25	45			45	-45	SN 083-7022 NORTH EXCAVATION
153+17.60		153+27.60	200	25	150			150	-150	SN 083-7022 CULVERT EXCAVATION
153+27.60		153+48.00	60	25	45			45	-45	SN 083-7022 SOUTH EXCAVATION
153+17.60		153+27.60	20	25	15			15	-15	SN 083-7022 RIPRAP EXCAVATION
		TOTALS	935						-651	

PAVEMENT REMOVAL SCHEDULE

LOCATION	PAVEMENT REMOVAL
	SQ YD
SN 083-7107	
STA 779+49 TO 779+82	96
SN 083-7108	
STA 828+58 TO 828+94	104
SN 083-7022	
STA 152+98 TO 153+48	145
TOTAL	345

TREE REMOVAL SCHEDULE

LOCATION	TREE REMOVAL (6 TO 15 UNITS DIAMETER)	TREE REMOVAL (OVER 15 UNITS DIAMETER)
	UNIT	UNIT
SN 083-7107		
STA 779+51 27' RT	6	
STA 779+52 26' RT	6	
STA 779+68, 29' RT	15	
STA 779+69, 30' RT		24
STA 779+73, 29' RT	15	
STA 779+60, 38' LT	12	
STA 779+70, 35' LT		18
STA 779+72, 39' LT	15	
SN 083-7108		
STA 828+63, 32' LT	6	
STA 828+64, 29' LT		30
STA 828+79, 31' LT		40
TOTALS	75	112

FURNISHING AND ERECTING RIGHT OF WAY MARKERS SCHEDULE

LOCATION	FURNISHING AND ERECTING RIGHT OF WAY MARKERS
	EACH
SN 083-7022	
STA 152+90.00, 30' LT	1
STA 152+90.00, 65' LT	1
STA 153+50.00, 30' LT	1
STA 153+50.00, 65' LT	1
STA 153+50.00, 30' RT	1
STA 153+50.00, 45' RT	1
TOTAL	6

MODEL: Schedule Of Quantities Sheet 1
FILE NAME: Y:\IDOT\1423-07_78399\78399 DESIGN\CADD\CAD_Sheets Common\D978399-sht-schedule.dgn

ESCA CONSULTANTS, INC.

USER NAME = atn	DESIGNED - ATN	REVISED -	
ESCA PROJECT NO. = 1423.07	DRAWN - ATN	REVISED -	
	CHECKED - ELH	REVISED -	
PLOT DATE = 2/28/2025	DATE - 01/25	REVISED -	

STATE OF ILLINOIS
DEPARTMENT OF TRANSPORTATION

SCHEDULE OF QUANTITIES

SCALE: N/A | SHEET 1 OF 2 SHEETS | STA. | TO STA.

F.A.P. RTE.	SECTION	COUNTY	TOTAL SHEETS	SHEET NO.
132/869	1CR-1; 103CR-1; 103CR-2	SALINE	59	8

CONTRACT NO. 78399

ILLINOIS | FED. AID PROJECT

PORTLAND CEMENT CONCRETE SCHEDULE

LOCATION	PORTLAND CEMENT CONCRETE PAVEMENT 10"	PORTLAND CEMENT CONCRETE SHOULDERS 10"	WELDED WIRE REINFORCEMENT	PROTECTIVE COAT
	SQ YD	SQ YD	SQ YD	SQ YD
SN 083-7107				
STA 779+49.00 TO 779+82.00	96		96	96
STA 779+49.00 TO 779+82.00 LT		11		11
STA 779+49.00 TO 779+82.00 RT		11		11
SN 083-7108				
STA 828+58.00 TO 828+94.00	104		104	104
STA 828+58.00 TO 828+94.00 LT		12		12
STA 828+58.00 TO 828+94.00 RT		12		12
SN 083-7022				
STA 152+98.00 TO 153+48.00	145		145	145
STA 152+98.00 TO 153+48.00 LT		28		28
STA 152+98.00 TO 153+48.00 RT		28		28
TOTALS	345	102	345	447

CHANGEABLE MESSAGE SIGN SCHEDULE

LOCATION	CHANGEABLE MESSAGE SIGN
	CAL DAY
SN 083-7107	
NORTHWEST OF IL 34 AND WEST END ROAD INTERSECTION	17
SOUTHEAST OF IL 34 AND MCFARLAND ROAD INTERSECTION	17
SN 083-7108	
NORTHWEST OF IL 34 AND MCFARLAND ROAD INTERSECTION	17
SOUTHEAST OF IL 34 AND EBENEZER CHURCH ROAD INTERSECTION	17
SN 083-7022	
NORTH OF IL 145 / 34 AND BUTLER ROAD INTERSECTION	17
SOUTH OF IL 145 / 34 AND PIERSON HILL ROAD INTERSECTION	17
TOTALS	102

SEEDING SCHEDULE

LOCATION	SEEDING, CLASS 2	SEEDING, CLASS 7	NITROGEN FERTILIZER NUTRIENT	PHOSPHORUS FERTILIZER NUTRIENT	POTASSIUM FERTILIZER NUTRIENT	AGRICULTURAL GROUND LIMESTONE
	ACRE	ACRE	POUND	POUND	POUND	TON
SN 083-7107						
STA 779+49.00 TO 779+82.00 LT	0.025	0.025	2.5	2.5	2.5	0.05
STA 779+49.00 TO 779+82.00 RT	0.025	0.025	2.5	2.5	2.5	0.05
SN 083-7108						
STA 828+58.00 TO 828+94.00 LT	0.025	0.025	2.5	2.5	2.5	0.05
STA 828+58.00 TO 828+94.00 RT	0.025	0.025	2.5	2.5	2.5	0.05
SN 083-7022						
STA 152+98.00 TO 153+48.00 LT	0.10	0.10	10	10	10	0.20
STA 152+98.00 TO 153+48.00 RT	0.05	0.05	5	5	5	0.10
TOTALS	0.25	0.25	25	25	25	0.5

EROSION CONTROL SCHEDULE

LOCATION	EROSION CONTROL BLANKET	TEMPORARY EROSION CONTROL SEEDING	PERIMETER EROSION BARRIER
	SQ YD	POUND	FOOT
SN 083-7107			
STA 779+49.00 TO 779+82.00 LT	45	5	73
STA 779+49.00 TO 779+82.00 RT	33	5	64
SN 083-7108			
STA 828+58.00 TO 828+94.00 LT	39	5	66
STA 828+58.00 TO 828+94.00 RT	43	5	69
SN 083-7022			
STA 152+98.00 TO 153+48.00 LT	119	20	135
STA 152+98.00 TO 153+48.00 RT	65	10	68
TOTALS	344	50	475

PAVEMENT MARKING SCHEDULE

LOCATION	DESCRIPTION	PAINT PAVEMENT MARKING LINE - 4"		PAVEMENT MARKING REMOVAL-GRINDING
		FOOT		SQ YD
		WHITE	YELLOW	
SN 083-7107				
STA 779+49.00 TO 779+82.00 LT	EDGE LINE	33		
STA 779+49.00 TO 779+82.00 RT	EDGE LINE	33		
STA 779+49.00 TO 779+82.00	CENTERLINE		20	
SN 083-7108				
STA 828+58.00 TO 828+94.00 LT	EDGE LINE	36		
STA 828+58.00 TO 828+94.00 RT	EDGE LINE	36		
STA 828+58.00 TO 828+94.00	CENTERLINE		20	
SN 083-7022				
STA 152+98.00 TO 153+48.00 LT	EDGE LINE	50		
STA 152+98.00 TO 153+48.00 RT	EDGE LINE	50		
STA 152+98.00 TO 153+48.00	CENTERLINE		20	
STA 152+13.0 TO 154+33.0 RT	EDGE LINE	220		74
STA 152+13.0 TO 154+33.0 LT	EDGE LINE	220		74
	SUBTOTALS	678	60	
	TOTALS	738		148

STONE RIPRAP SCHEDULE

LOCATION	STONE RIPRAP, CLASS A4	FILTER FABRIC
	SQ YD	SQ YD
SN 083-7107		
UPSTREAM END OF SN 083-7107 (FROM STRUCTURE PLANS)	27	22
DOWNSTREAM END OF SN 083-7107 (FROM STRUCTURE PLANS)	18	14
SN 083-7108		
UPSTREAM END OF SN 083-7108 (FROM STRUCTURE PLANS)	21	15
DOWNSTREAM END OF SN 083-7108 (FROM STRUCTURE PLANS)	21	15
SN 083-7022		
UPSTREAM END OF SN 083-7022 (FROM STRUCTURE PLANS)	26	26
DOWNSTREAM END OF SN 083-7022 (FROM STRUCTURE PLANS)	110	105
TOTALS	223	197

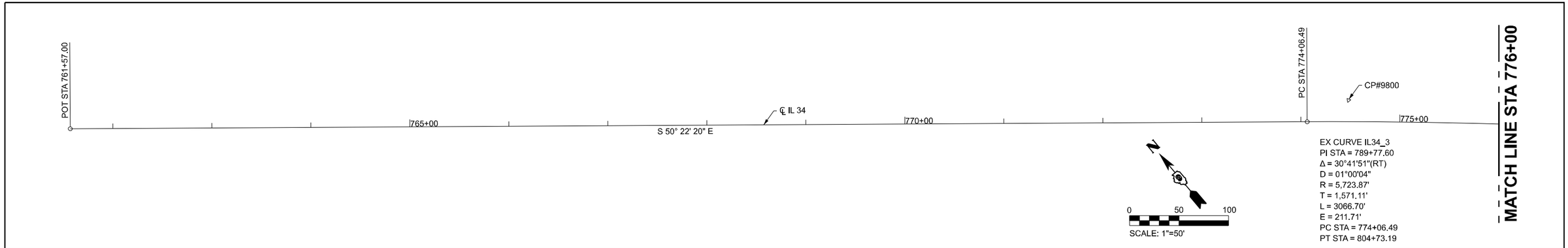

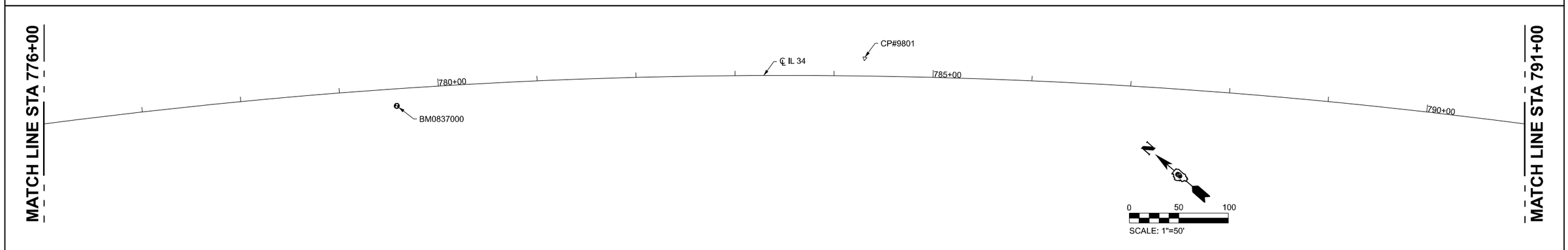

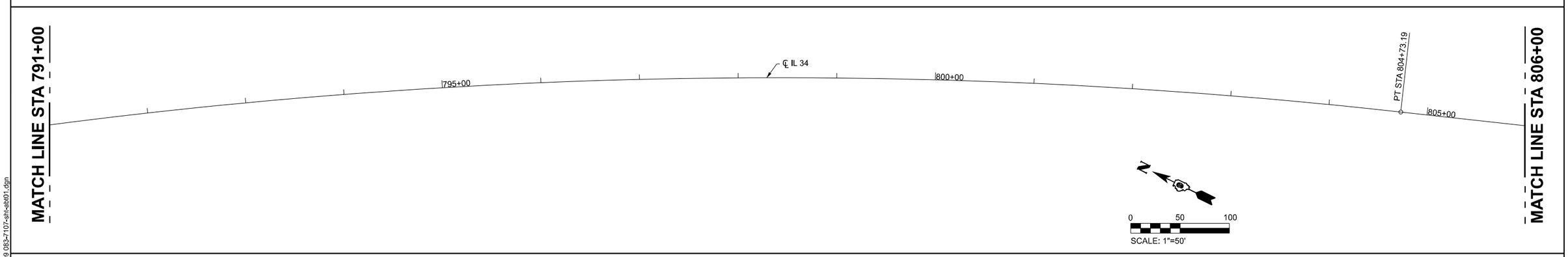

BENCHMARK

NAVD 88

BM083-0401 - IDOT MONUMENT IN SE QUADRANT OF INTERSECTION OF IL ROUTE 34 AND MCFARLAND ROAD STA 821+00.21, 26.31' LT, EL 402.172

BM083-7000 - TOP OF REBAR INSIDE SQUARE CUT AT NORTH END OF WEST HEADWALL OF SN 083-7000, EL 409.509

MODEL: PLOT
FILE NAME: Y:\IDOT\1423-07_78399\78399 DESIGN\CADD\CAD_Sheets 083-7107\D978399 083-7107-sht-alt01.dgn

ESCA CONSULTANTS, INC.
CIVIL & STRUCTURAL ENGINEERS

USER NAME = atn	DESIGNED -	REVISED -	
ESCA PROJECT NO. = 1423.07	DRAWN - NHC	REVISED -	
	CHECKED - ATN	REVISED -	
PLOT DATE = 2/28/2025	DATE - 02/25	REVISED -	

STATE OF ILLINOIS
DEPARTMENT OF TRANSPORTATION

ALIGNMENT, TIES & BENCHMARKS
PR SN 083-7107 & PR SN 083-7108

SCALE: 1'=50' | SHEET 1 OF 2 SHEETS | STA. 761+57.00 TO STA. 806+00.00

F.A.P. RTE.	SECTION	COUNTY	TOTAL SHEETS	SHEET NO.
132/869	1CR-1; 103CR-1; 103CR-2	SALINE	59	10
		CONTRACT NO. 78399		
		ILLINOIS	FED. AID PROJECT	

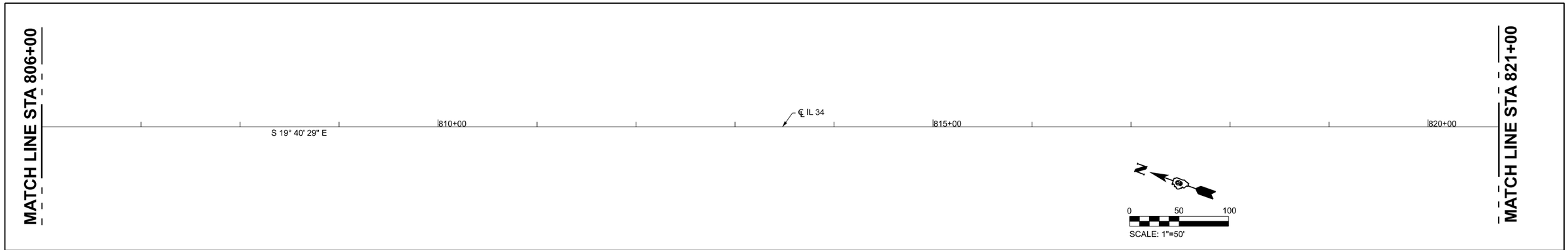

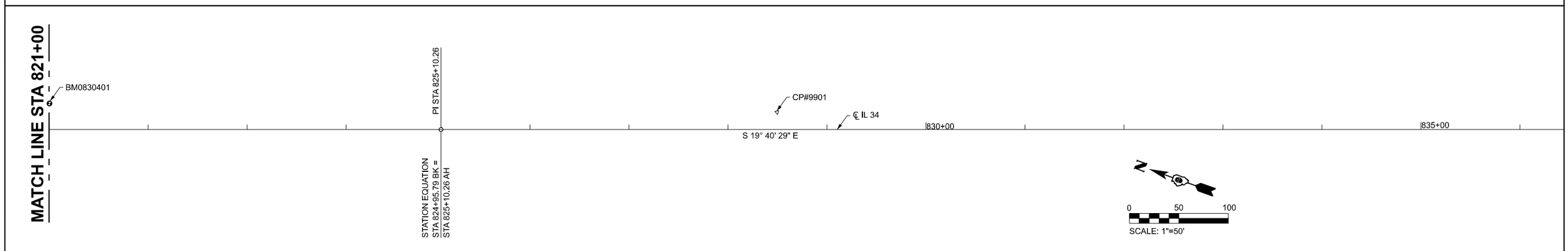

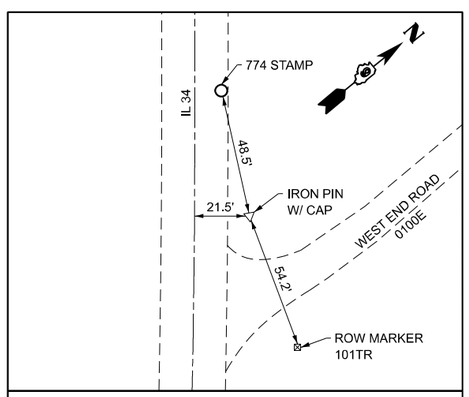

CP#9800

STA 774+48.15, 21.77' LT, ℄ IL 34, EL 409.71
N = 441,110.674 E = 881,725.251

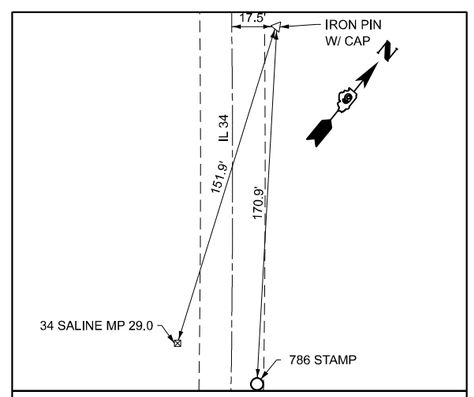

CP#9801

STA 784+30.77, 17.86' LT, ℄ IL 34, EL 410.59
N = 440,412.006 E = 882,419.320

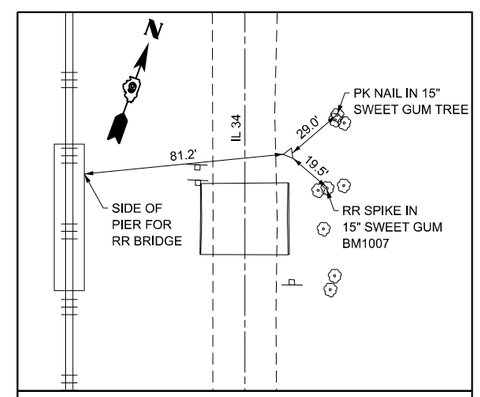

CP#9901

STA 828+49.62, 17.49' LT, ℄ IL 34, EL 405.10
N = 436,421.077 E = 884,229.988

MODEL: PLOT
FILE NAME: Y:\IDOT\1423-07_78399\78399 DESIGN\CADD\CAD_Sheets 083-7107\D978399 083-7107-sht-alt02.dgn

ESCA CONSULTANTS, INC.

USER NAME = atn	DESIGNED -	REVISED -	
ESCA PROJECT NO. = 1423.07	DRAWN - NHC	REVISED -	
	CHECKED - ATN	REVISED -	
PLOT DATE = 3/11/2025	DATE - 03/25	REVISED -	

STATE OF ILLINOIS
DEPARTMENT OF TRANSPORTATION

ALIGNMENT, TIES & BENCHMARKS
PR SN 083-7107 & PR SN 083-7108

SCALE: 1'=50' | SHEET 2 OF 2 SHEETS | STA. 806+00.00 TO STA. 836+44.76

F.A.P. RTE.	SECTION	COUNTY	TOTAL SHEETS	SHEET NO.
132/869	1CR-1; 103CR-1; 103CR-2	SALINE	59	11
		CONTRACT NO. 78399		
		ILLINOIS	FED. AID PROJECT	

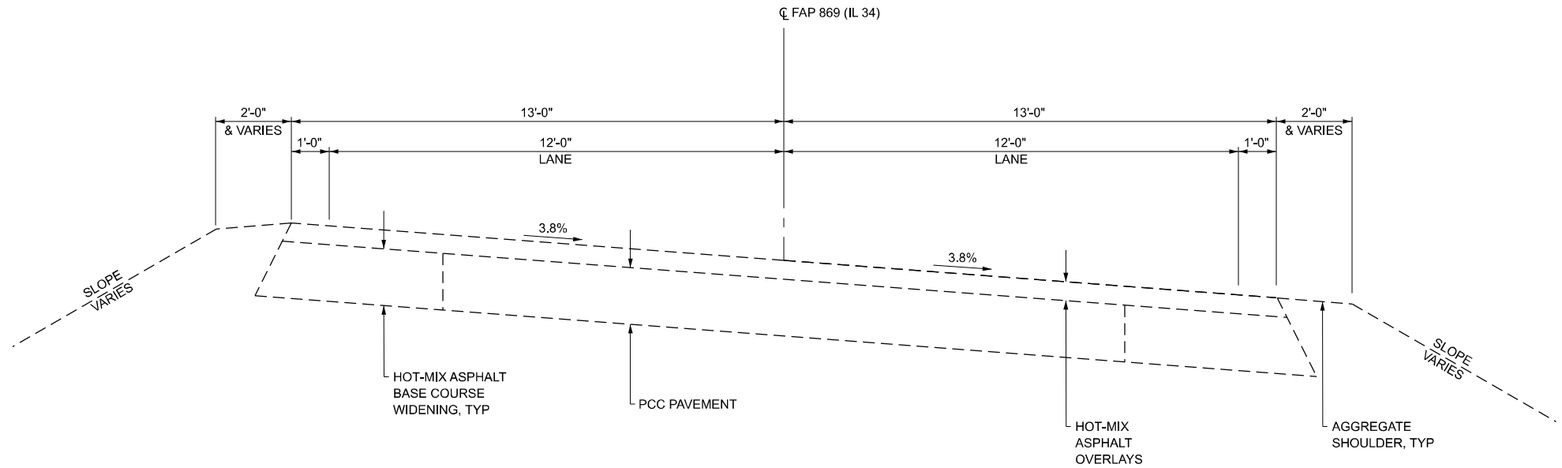

EXISTING TYPICAL SECTION
STA 778+00.00 TO STA 779+59.83
STA 779+71.17 TO STA 781+00.00

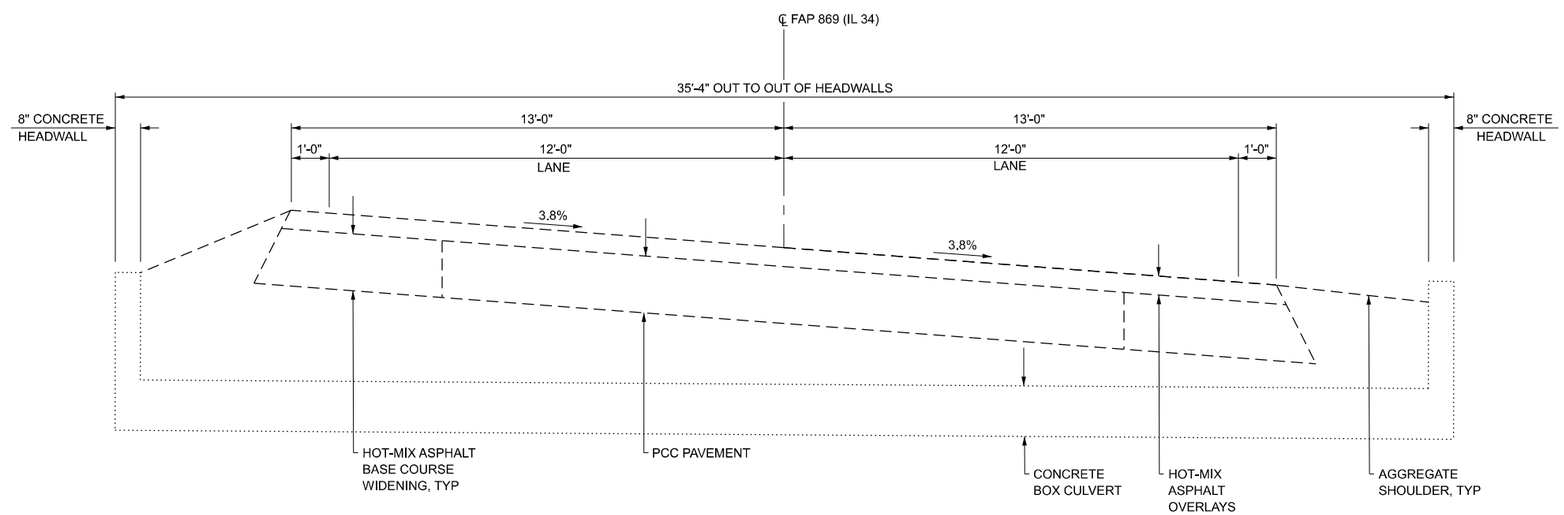

EXISTING TYPICAL SECTION
STA 779+59.83 TO STA 779+71.17

MODEL: Existing Typical Sections Sheet
FILE NAME: Y:\IDOT\1423-07_78399\78399 DESIGN\CADD\CAD_Sheets 083-7107\D978399 083-7107-sht-typical.dgn

ESCA CONSULTANTS, INC.

USER NAME = atn	DESIGNED - ATN	REVISED -	
ESCA PROJECT NO. = 1423.07	DRAWN - ATN	REVISED -	
	CHECKED - ELH	REVISED -	
PLOT DATE = 2/25/2025	DATE - 01/25	REVISED -	

STATE OF ILLINOIS
DEPARTMENT OF TRANSPORTATION

EXISTING TYPICAL SECTIONS
PR SN 083-7107

SCALE: NONE | SHEET 1 OF 1 SHEETS | STA. | TO STA.

F.A.P. RTE.	SECTION	COUNTY	TOTAL SHEETS	SHEET NO.
132/869	1CR-1; 103CR-1; 103CR-2	SALINE	59	12

CONTRACT NO. 78399

ILLINOIS | FED. AID PROJECT

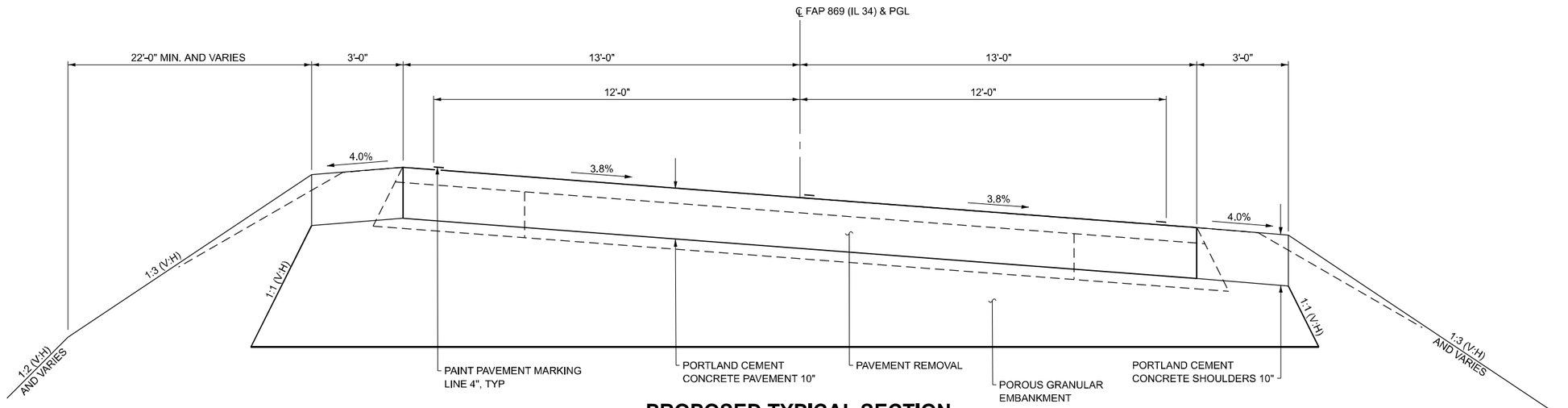

PROPOSED TYPICAL SECTION
STA 779+49.00 TO STA 779+59.67
STA 779+71.33 TO STA 779+82.00

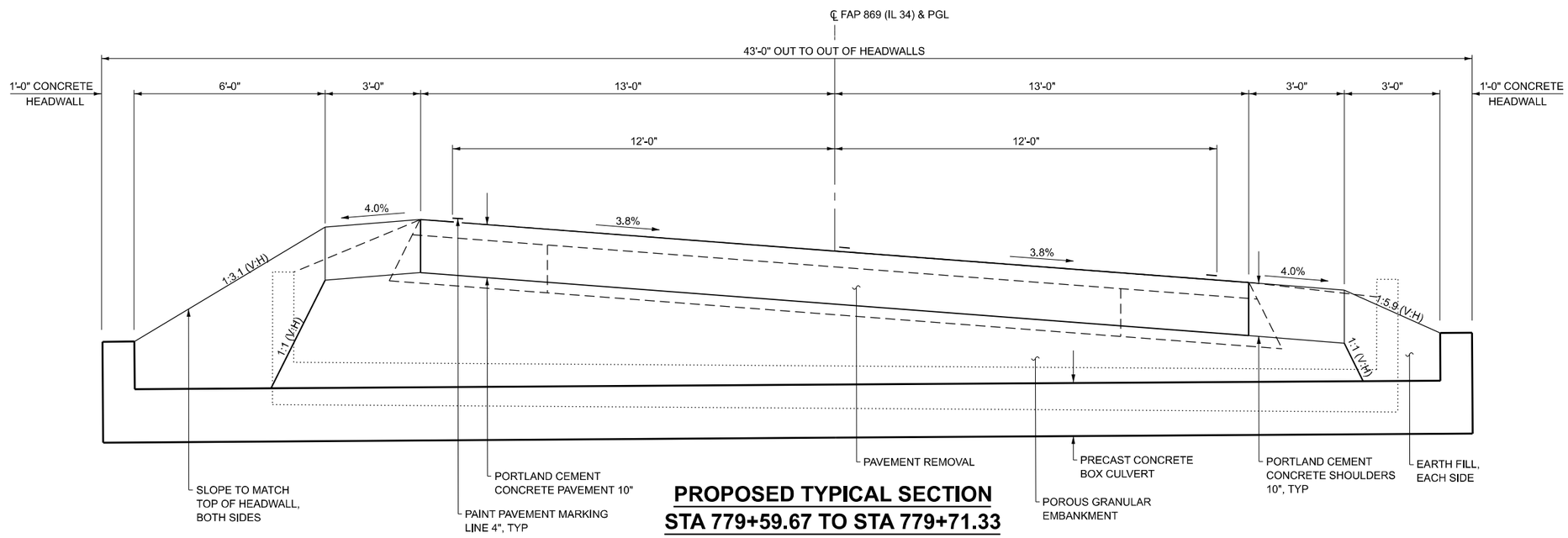

PROPOSED TYPICAL SECTION
STA 779+59.67 TO STA 779+71.33

MODEL: Proposed Typical Sections Sheet
FILE NAME: Y:\IDOT\1423-07_78399\78399 DESIGN\CADD\CAD_Sheets 083-7107\D978399 083-7107-sht-typical.dgn

ESCA CONSULTANTS, INC.

USER NAME = atn	DESIGNED - ATN	REVISED -	
ESCA PROJECT NO. = 1423.07	DRAWN - ATN	REVISED -	
	CHECKED - ELH	REVISED -	
PLOT DATE = 2/25/2025	DATE - 01/25	REVISED -	

STATE OF ILLINOIS
DEPARTMENT OF TRANSPORTATION

PROPOSED TYPICAL SECTIONS
PR SN 083-7107

SCALE: NONE | SHEET 1 OF 1 SHEETS | STA. | TO STA.

F.A.P. RTE.	SECTION	COUNTY	TOTAL SHEETS	SHEET NO.
132/869	1CR-1; 103CR-1; 103CR-2	SALINE	59	13
		CONTRACT NO. 78399		
		ILLINOIS	FED. AID PROJECT	

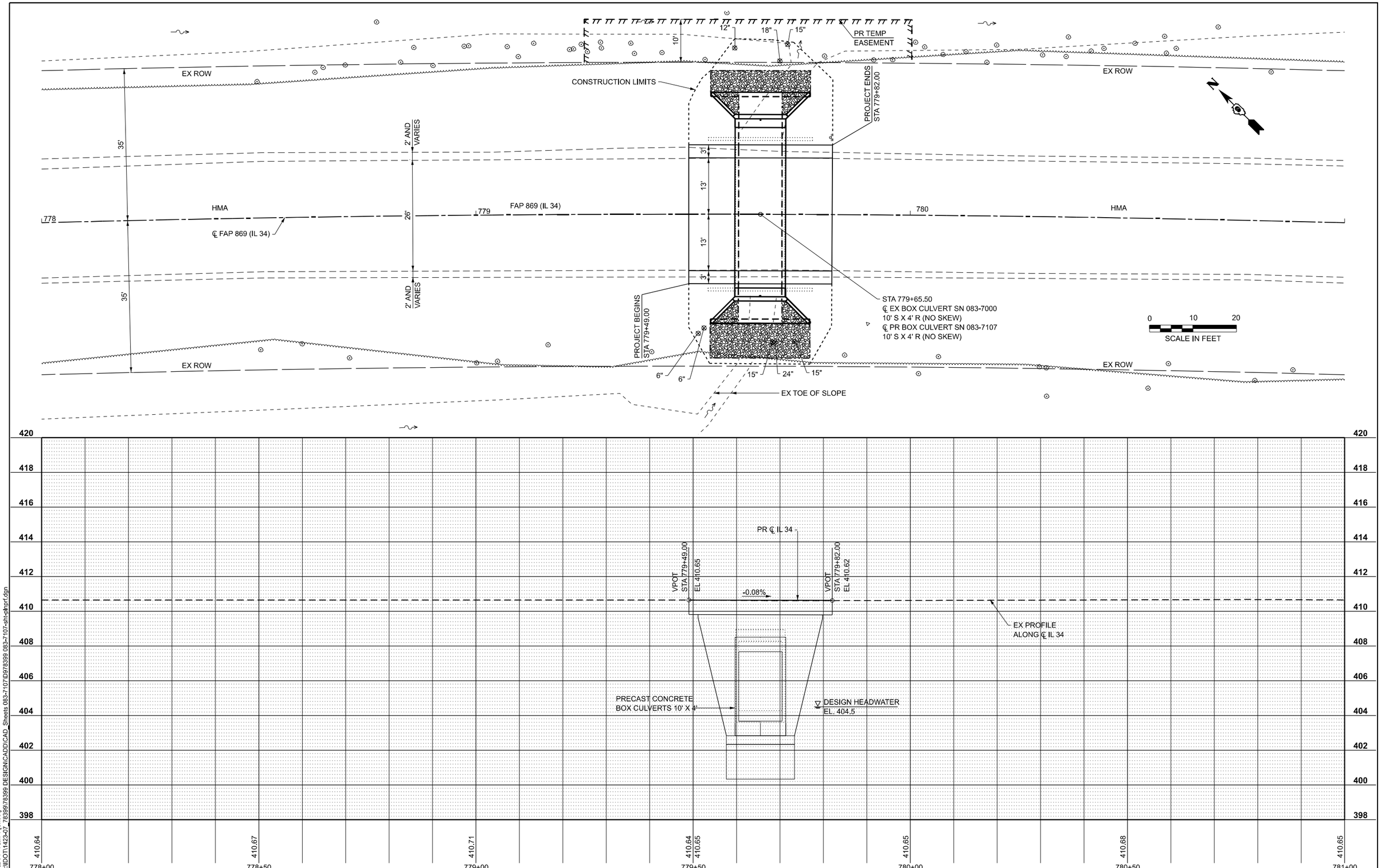

MODEL: PrCL IL 34 - Plan 1 [Sheet]
FILE NAME: Y:\IDOT\1423-07_78399\78399 DESIGN\CADD\CAD_Sheets 083-7107\D978399 083-7107-sht-pltprf.dgn

ESCA CONSULTANTS, INC.

USER NAME = atn	DESIGNED - ATN	REVISED -
ESCA PROJECT NO. = 1423.07	DRAWN - ATN	REVISED -
	CHECKED - ELH	REVISED -
PLOT DATE = 2/28/2025	DATE - 02/25	REVISED -

STATE OF ILLINOIS
DEPARTMENT OF TRANSPORTATION

PLAN AND PROFILE
PR SN 083-7107

SCALE: AS SHOWN | SHEET 1 OF 1 SHEETS | STA. 778+00.00 TO STA. 781+00.00

F.A.P. RTE.	SECTION	COUNTY	TOTAL SHEETS	SHEET NO.
132/869	1CR-1; 103CR-1; 103CR-2	SALINE	59	14

CONTRACT NO. 78399

ILLINOIS | FED. AID PROJECT

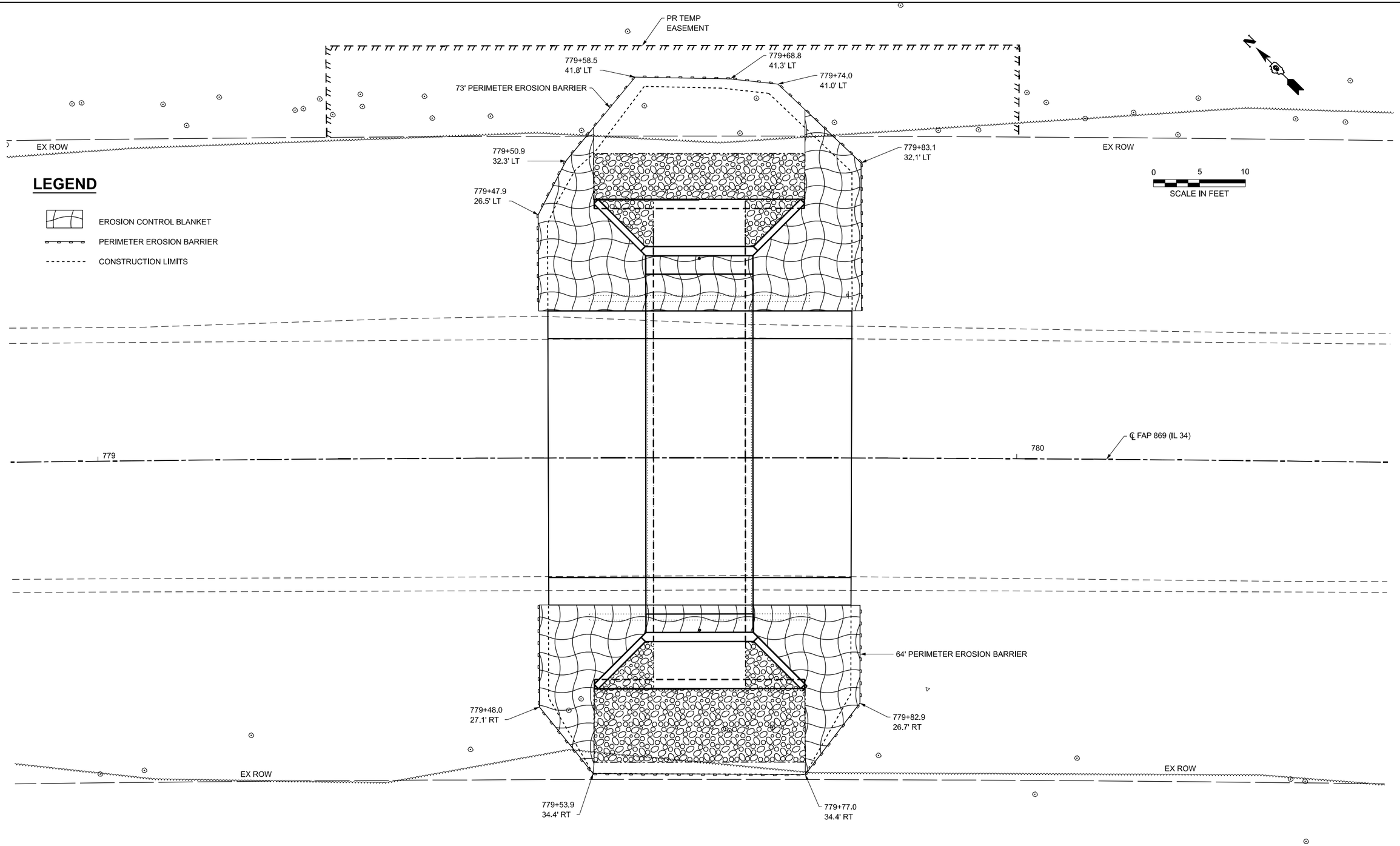

MODEL: PrCL IL 34 - Erosion Control Plan [Sheet]
FILE NAME: Y:\IDOT\1423-07_78399\78399 DESIGN\CADD\CAD_Sheets 083-7107\D978399 083-7107-sht-eros.dgn

ESCA CONSULTANTS, INC.

USER NAME = atn	DESIGNED - ATN	REVISED -	
ESCA PROJECT NO. = 1423.07	DRAWN - ATN	REVISED -	
	CHECKED - ELH	REVISED -	
PLOT DATE = 2/28/2025	DATE - 02/25	REVISED -	

STATE OF ILLINOIS
DEPARTMENT OF TRANSPORTATION

EROSION CONTROL PLAN
PR SN 083-7107

SCALE: AS SHOWN | SHEET 1 OF 1 SHEETS | STA. 778+90.50 TO STA. 780+40.50

F.A.P. RTE.	SECTION	COUNTY	TOTAL SHEETS	SHEET NO.
132/869	1CR-1; 103CR-1; 103CR-2	SALINE	59	15
		CONTRACT NO. 78399		
		ILLINOIS FED. AID PROJECT		

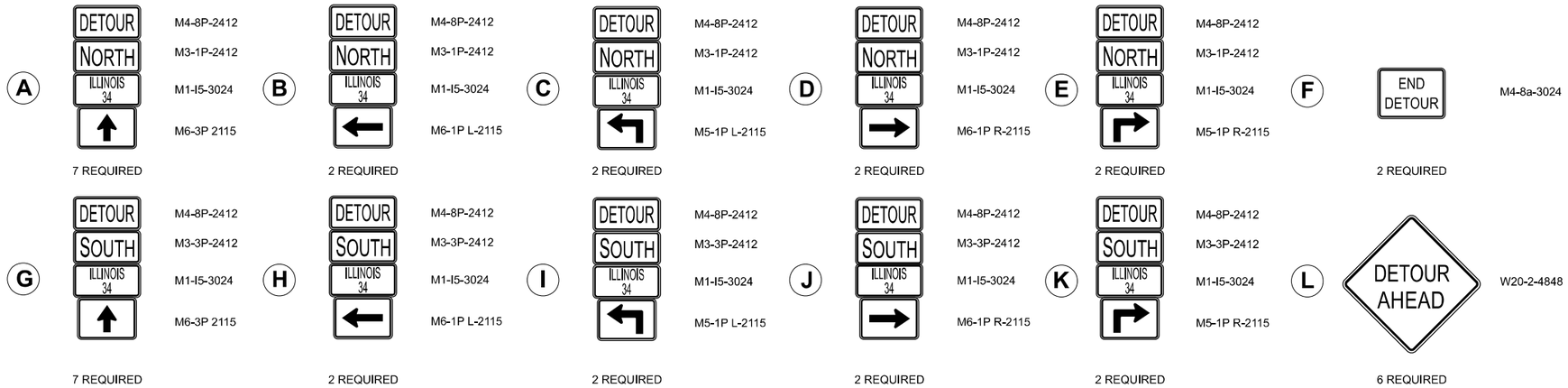

PRIOR TO CLOSURE

MB - CHANGEABLE MESSAGE BOARD - 2 REQUIRED (NOTIFICATION - 2 WEEKS PRIOR TO START OF WORK AND DURATION OF THE CLOSURE)

PRIOR TO CLOSURE	DURING CLOSURE
ILLINOIS 34 WILL BE CLOSED	ILLINOIS 34 CLOSED
XX MILES AHEAD	XX MILES AHEAD
DATE TO DATE	LOCAL TRAFFIC ONLY

SUGGESTED MESSAGE
(EXACT MESSAGE SHALL BE DETERMINED BY THE ENGINEER)

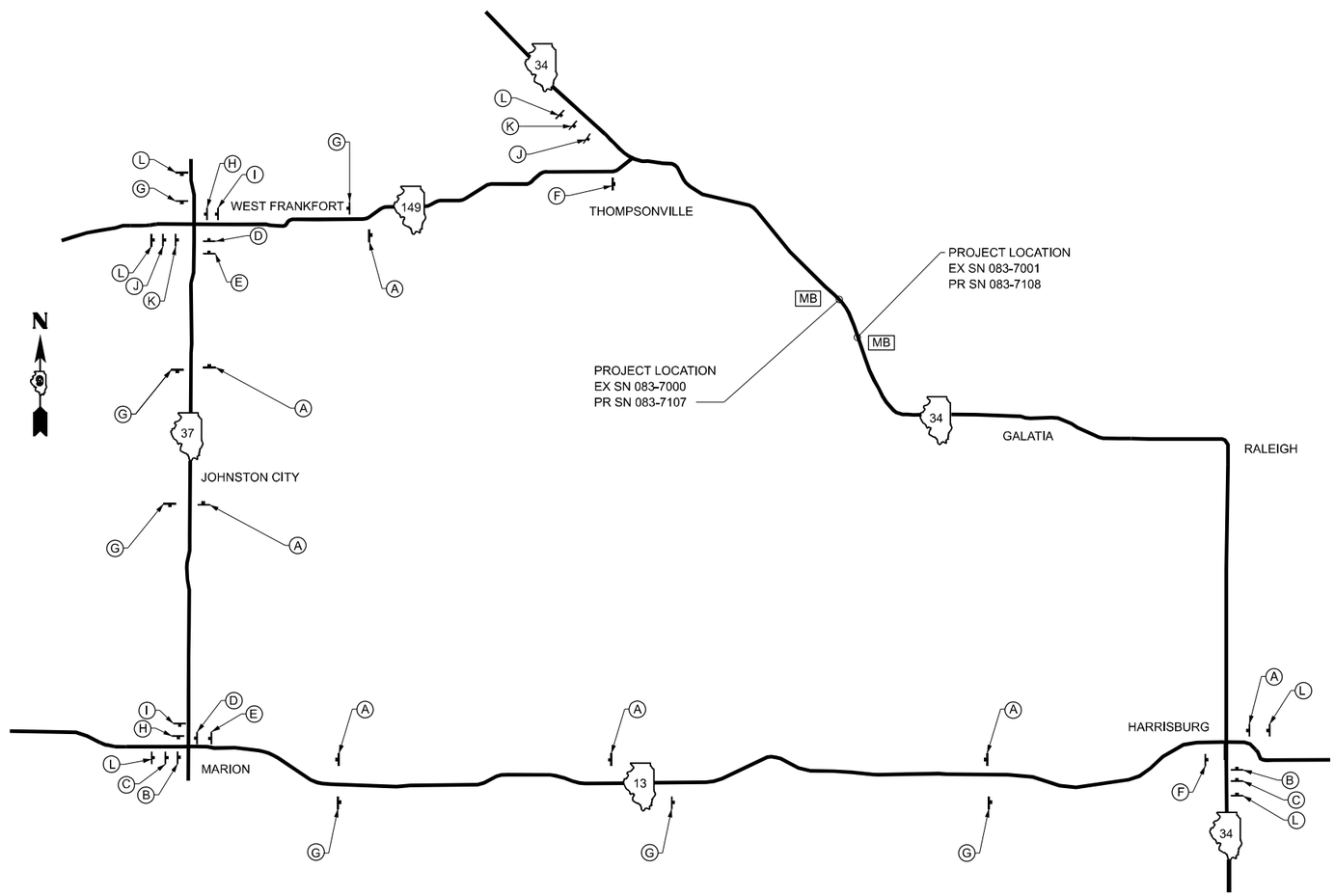

NOTES:

1. THE CONTRACTOR HAS THE OPTION OF USING METAL POSTS INSTEAD OF WOOD.
2. THE SIGNS SHALL BE BLACK ON ORANGE, THE POSTS SHALL BE PLACED 12 FEET FROM THE EDGE OF PAVEMENT AS DIRECTED BY THE ENGINEER.
3. ALL SIGNS AND HARDWARE REQUIRED TO INSTALL THE DETOUR ROUTE SIGNING SHALL BE INCLUDED IN COST OF DETOUR SIGNING.
4. SIGNS SHALL BE REMOVED ON COMPLETION OF THE CONTRACT AT THE DIRECTION OF THE ENGINEER. THIS WORK SHALL BE COMPLETED ACCORDING TO SECTION 724. THIS WORK WILL NOT BE PAID FOR. THE SIGNS AND POSTS SHALL BECOME PROPERTY OF THE CONTRACTOR.
5. THE RELOCATING, MAINTENANCE OR REPLACEMENT OF SIGNS SHALL BE INCLUDED IN COST OF DETOUR SIGNING.
6. EXACT SIGN PLACEMENT WILL BE DETERMINED BY THE ENGINEER.
7. ALL EXISTING SIGNING THAT IS NOT APPLICABLE WHILE THE ROAD CLOSURE IS IN EFFECT SHALL BE COMPLETELY COVERED BY THE CONTRACTOR.
8. THE DISTRICT 9 OPERATIONS ENGINEER SHALL BE CONTACTED 10 DAYS PRIOR TO ERECTION OF THE SIGNS.
9. THE SIGNS ON THIS SHEET WILL BE USED FOR THE REPLACEMENT OF BOTH STRUCTURES.
10. TYPE III BARRICADES WITH ROAD CLOSED SIGNS AS SHOWN ON HIGHWAY STANDARD 701901 SHALL BE ERECTED AT EACH END OF THE WORK SITE DURING ROAD CLOSURE.

MODEL: Detour Sheet
FILE NAME: Y:\IDOT\1423-07_78399\78399 DESIGN\CADD\CAD_Sheets 083-7107\D978399 083-7107-sht-staging.dgn

ESCA CONSULTANTS, INC.

USER NAME = atn	DESIGNED - ATN	REVISED -	
ESCA PROJECT NO. = 1423.07	DRAWN - ATN	REVISED -	
	CHECKED - ELH	REVISED -	
PLOT DATE = 3/3/2025	DATE - 03/25	REVISED -	

STATE OF ILLINOIS
DEPARTMENT OF TRANSPORTATION

DETOUR SIGNING
PR SN 083-7107 & SN 083-7108

SCALE: NONE | SHEET 1 OF 1 SHEETS | STA. | TO STA.

F.A.P. RTE.	SECTION	COUNTY	TOTAL SHEETS	SHEET NO.
132/869	1CR-1; 103CR-1; 103CR-2	SALINE	59	16

CONTRACT NO. 78399

ILLINOIS | FED. AID PROJECT

PARCEL#	TAX ID#	PURPOSE	ACREAGE
91223001	13-1-057-01	T.E.	0.017 ACRES±

JH9	N: 440804.289' E: 882094.818'
JH10	N: 440797.195' E: 882087.770'
JH11	N: 440750.659' E: 882148.087'
JH12	N: 440743.659' E: 882140.946'

NORTHWEST QUARTER

SECTION 32

T. 7 S., R. 5 E., 3RD P.M.

ALIGNMENT INFO
FAP 869 (IL 34)

POINT#	STATION	NORTHING	EASTING
P.C.3	774+06.49	441120.697	881679.253
P.T.3	804+73.19	438639.257	883418.297

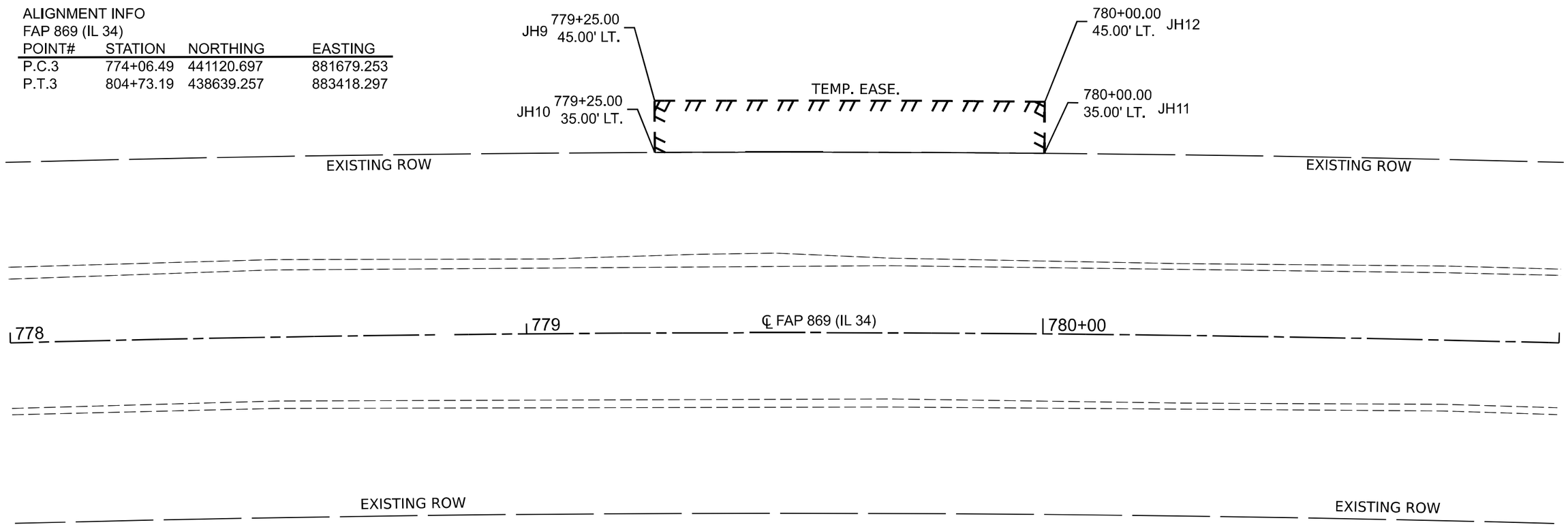

STATE OF ILLINOIS
JOHN G. HOBBS
No. 3890
CARBONDALE
PROFESSIONAL LAND SURVEYOR

JOHN G. HOBBS
ILLINOIS PROFESSIONAL LAND SURVEYOR

Current license expires 11/2024.

This professional service conforms to the current Illinois minumum standards for a boundary survey.

EX CURVE IL34-3
PI STA = 789+77.60
Δ = 30-41-51 (RT)
D = 01°00'04"
R = 5,723.87'
T = 1,571.11'
L = 3,066.70'
LC = 3,030.15'
PC STA = 774+06.49
PT STA = 804+73.19

N

0 20 40
SCALE IN FEET

MODEL: PrCL IL 34 - Plan 1 [Sheet]
FILE NAME: c:\pw_work\pwidot\hobbsjgd\d1044348\D978399-Sht-ROW.dgn

USER NAME = john.hobbs	DESIGNED -	REVISED -
	DRAWN -	REVISED -
	CHECKED -	REVISED -
PLOT DATE = 2/21/2025	DATE -	REVISED -

STATE OF ILLINOIS
DEPARTMENT OF TRANSPORTATION

RIGHT OF WAY PLANS

T7S, R5E, 3RD PM | DRAWING COMPLETED 02/21/2025 | JOB NO. R-99-012-23
SCALE: 1"=20' | SHEET 2 OF 2 SHEETS | STA. 778+00.00 TO STA. 781+00.00

F.A.P RTE.	SECTION	COUNTY	TOTAL SHEETS	SHEET NO.
869	1CR-1;103CR-1;103CR-2	SALINE	59	17
DRAWN BY: JOHN G. HOBBS		CONTRACT NO. 78399		
FED. ROAD DIST. NO.	ILLINOIS	FED. AID PROJECT		

FAP 132/FAP 869

Benchmark: BM083-7000 – top of rebar inside square cut at north end of west headwall of SN 083-7000, elev. 409.509 (NAVD 88).

Existing Structure: SN 083-7000 was built in 1928 as SBI Route 143, Section 103A. It is a single-barrel, 10' span by 4' rise, cast-in-place concrete culvert that is 35'-4" long. The culvert is not skewed. The structure is located within a horizontal curve with a superelevation of approximately 3.8%. A short-term road closure will be used, and traffic will use a temporary detour route.

No Salvage.

WATERWAY INFORMATION

Drainage Area = 4 acres		Low EOP elev. 410.06 at sta. 777+45		
Flood	Freq. Yr.	Q C.F.S.	Headwater Elevation Existing	Headwater Elevation Proposed
	10	9	404.9	404.6
Design	50	12	405.0	404.7
Base	100	14	405.1	404.7
Max. Calc.	500	17	405.1	404.8

INDEX OF SHEETS

GENERAL NOTES

The design fill height for this box is 2.7 ft. maximum and 1.4 ft. minimum. The precast box culvert sections shall conform to the requirements of ASTM C 1577.

Drain holes shall be provided on exterior culvert walls for each precast box segment with a clear rise greater than 3 ft. The drain hole shall be located within the lower ⅓ of the clear rise of the box culvert, shall not intercept the haunch, and shall conform to the requirements of Article 503.11 of the Standard Specifications.

Nonwoven geotextile fabric shall conform to the requirements of Art. 1080.01 of the Standard Specifications. The minimum weight of the fabric shall be 6 ounces per square yard.

Precast concrete box culverts and box culvert end sections shall be backfilled with Porous Granular Embankment in the required excavation areas on the sides of the box culvert from the bottom of the proposed pavement to the bottom of the box culvert. This area of PGE is included in the Porous Granular Embankment pay item. The 6-inch thick layer of porous granular material required under the precast concrete box culvert, according to Section 540.06 of the Standard Specifications, shall also apply to the end sections. Cost of this porous granular material will not be paid for separately but shall be included in the unit price of the work for which it is required.

If the Contractor elects to use cast-in-place construction for the end sections, any temporary soil retention required will be at the Contractor's expense.

Layout of the slope protection system may be varied to suit ground conditions in the field as directed by the Engineer.

The Contractor shall halt the excavation at the bottom of the 6" porous granular material under the culvert and request a soils test from IDOT District 9. The District Geotechnical Engineer will evaluate the need for additional excavation and determine the limits of Rock Fill.

Geocomposite Wall Drain shall be according to Section 591 of the Standard Specifications, except that concrete nails shall not be used in areas where it overlaps Membrane Waterproofing System for Buried Structures.

The Porous Granular Embankment shall be CA-7 or CA-11 and capped with 1'-0" minimum thickness CA-6 or CA-10 directly underneath the proposed concrete pavement. The outer 3'-0" of the culvert shall be backfilled with impervious material at each end.

The removal of the existing box culvert, headwalls, and wingwalls is included in Removal of Existing Structures.

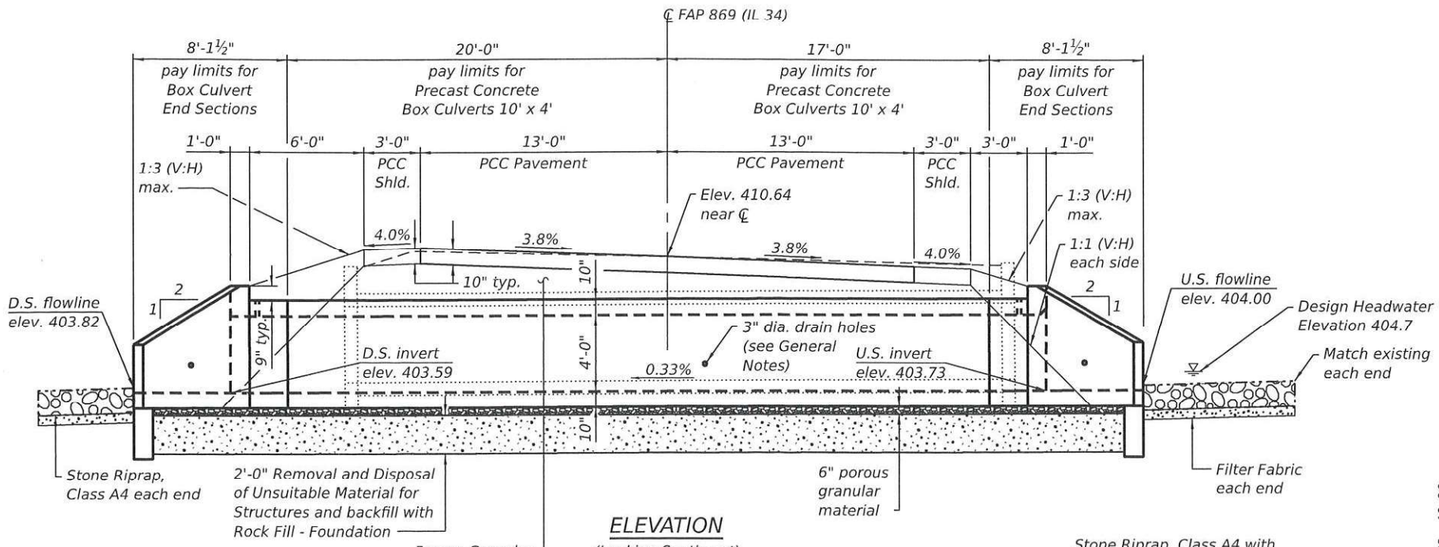

ELEVATION

(Looking Southeast)

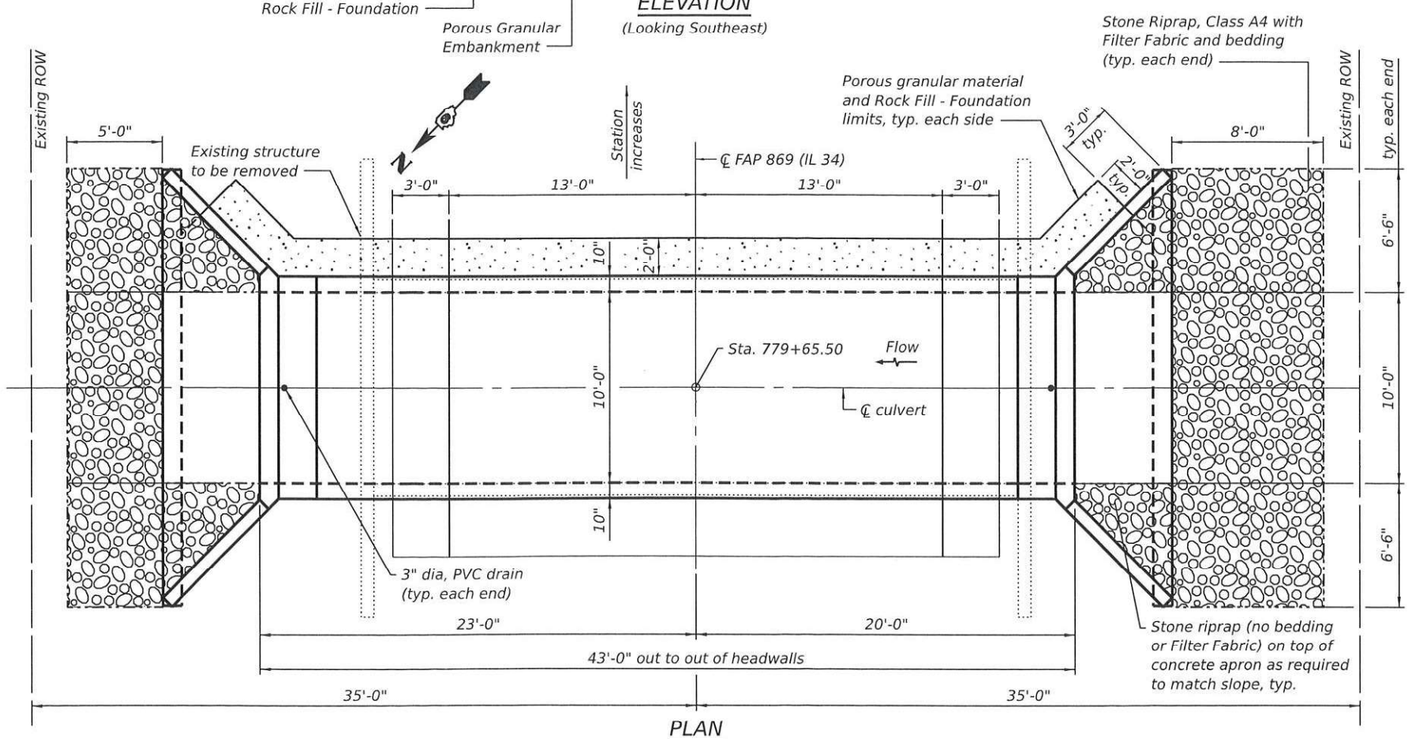

PLAN

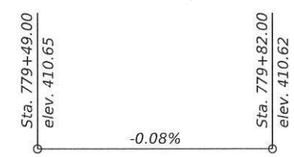

IL 34 PROFILE GRADE

(Along ℄ roadway)

DESIGN SPECIFICATIONS

2020 AASHTO LRFD Bridge Design Specifications, 9th Edition

LOADING HL-93

DESIGN STRESSES

PRECAST UNITS

f'c = 5,000 psi
fy = 65,000 psi (welded wire reinforcement)

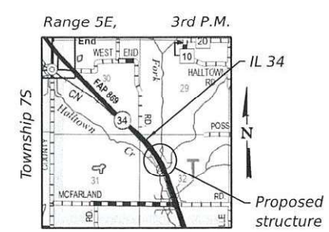

LOCATION SKETCH

STATE OF ILLINOIS ERIC L. HENKE No. 081-006159 LICENSED STRUCTURAL ENGINEER

EXPIRES 11-30-2026

SIGNATURE

03-03-25
DATE

TOTAL BILL OF MATERIAL

ITEM	UNIT	TOTAL
Porous Granular Embankment	Cu. Yd.	130
Stone Riprap, Class A4	Sq. Yd.	45
Filter Fabric	Sq. Yd.	36
Removal of Existing Structures No.1	Each	1
Removal and Disposal of Unsuitable Material for Structures	Cu. Yd.	63
Box Culvert End Sections, Culvert No. 1	Each	2
Precast Concrete Box Culverts 10' x 4'	Foot	37
Geocomposite Wall Drain	Sq. Yd.	63
Membrane Waterproofing System for Buried Structures	Sq. Yd.	63
Rock Fill - Foundation	Ton	94

GENERAL PLAN AND ELEVATION
IL RTE. 34 OVER CREEK
FAP RTE. 869 SEC. 103CR-1
SALINE COUNTY
STATION 779+65.50
PROPOSED SN 083-7107

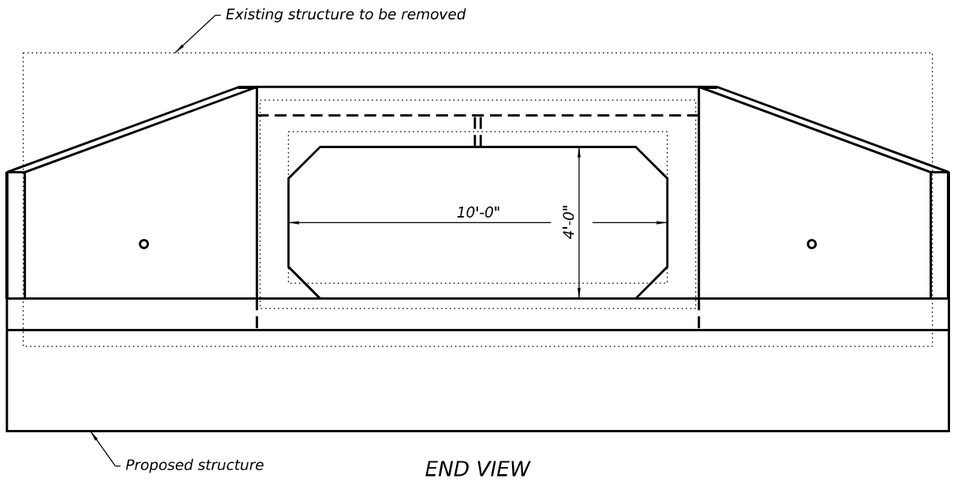

END VIEW

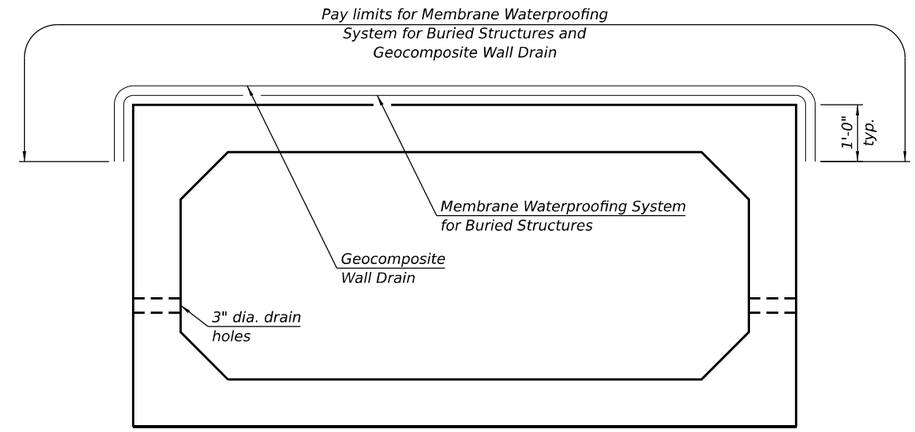

WATERPROOFING SECTION THRU CULVERT

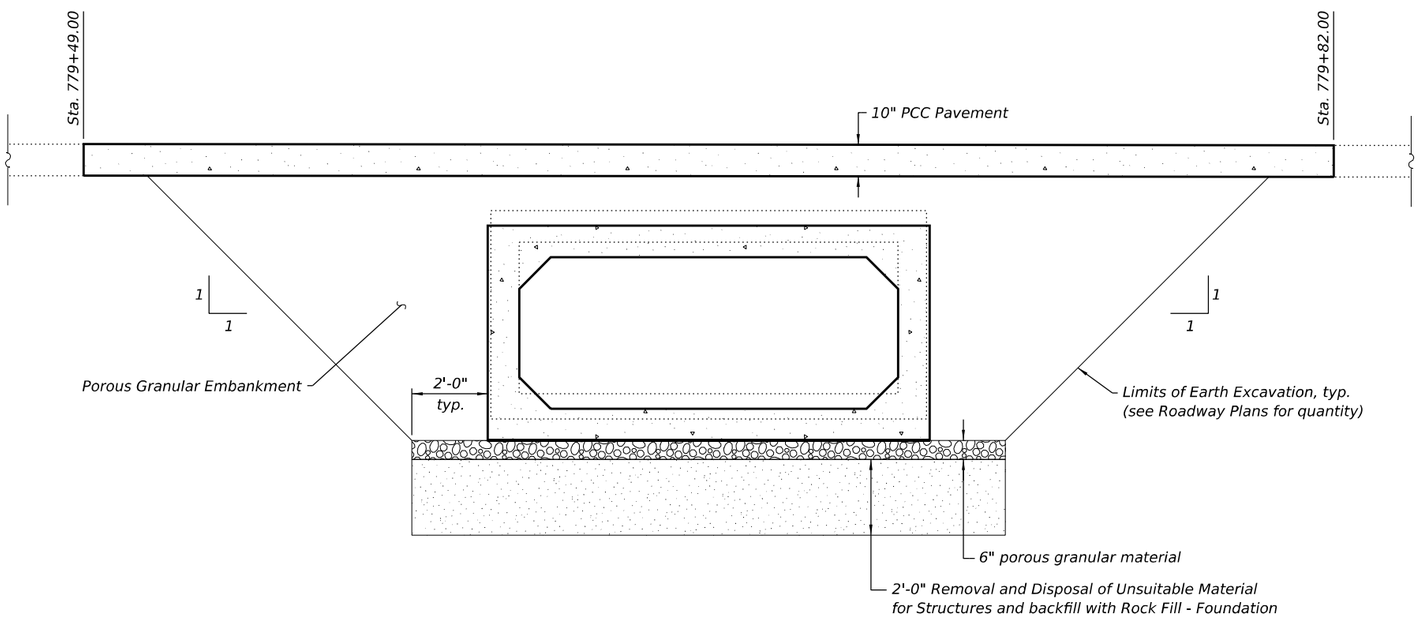

SECTION ALONG ROADWAY SHOWING POROUS GRANULAR EMBANKMENT

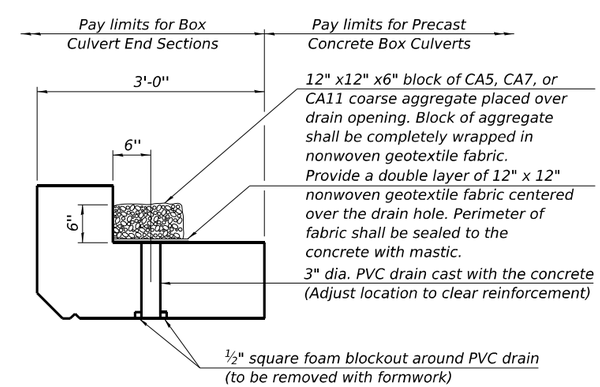

DRAIN DETAIL

(All costs associated with furnishing and constructing the above drain detail will not be measured for payment but shall be included in the contract unit price for the associated work.)

MODEL: Sheet
FILE NAME: Y:\IDOT\1423-07_78399\78399 DESIGN\CADD\SP SN 083-7107\0837107-78399-02-GenData.dgn

ESCA CONSULTANTS, INC.

USER NAME = nhc	DESIGNED -	ELH	12/24	REVISED -	
ESCA PROJECT NO.= 1423.07	CHECKED -	ARD	12/24	REVISED -	
PLOT SCALE = 0:2 ':" / in.	DRAWN -	NHC	02/25	REVISED -	
PLOT DATE = 3/3/2025	CHECKED -	ELH	02/25	REVISED -	

STATE OF ILLINOIS
DEPARTMENT OF TRANSPORTATION

GENERAL DATA
PROPOSED SN 083-7107

SHEET 2 OF 4 SHEETS

F.A.P. RTE.	SECTION	COUNTY	TOTAL SHEETS	SHEET NO.
132/869	1CR-1;103CR-1;103CR-2	SALINE	59	19
		CONTRACT NO. 78399		
	ILLINOIS	FED. AID PROJECT		

3/3/2025 11:37:06 AM

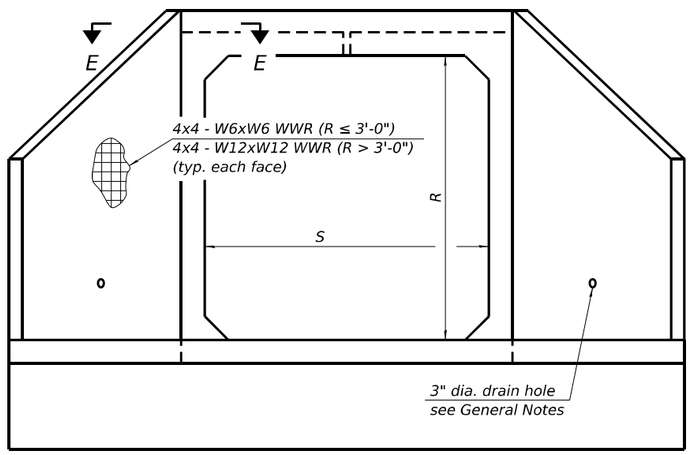

END VIEW

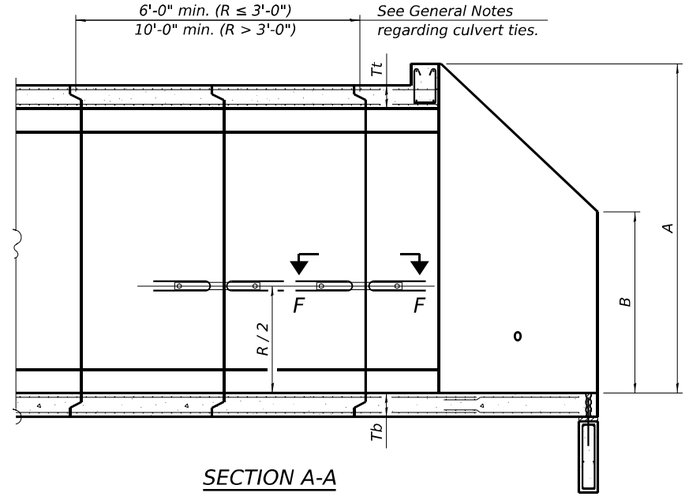

SECTION A-A

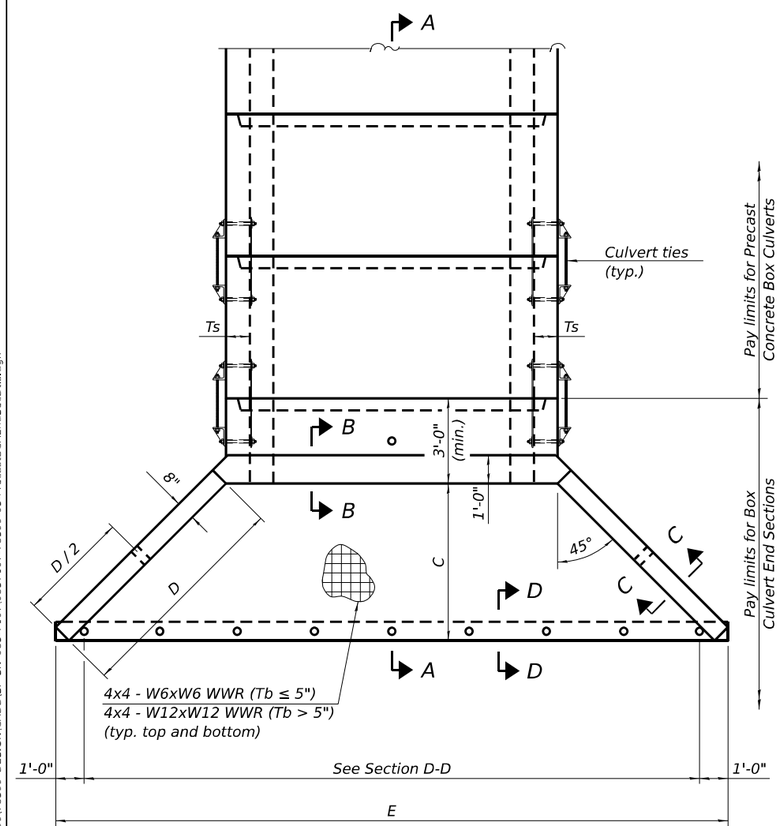

PLAN

GENERAL NOTES

Box Culvert End Sections shall be constructed according to the requirements of Section 540 of the Standard Specifications except as modified herein. End sections will be paid for at the contract unit price per each for Box Culvert End Sections.

The Contractor may furnish the end section as a single precast concrete piece or construct the end section in the field using cast-in-place (CIP) construction. For CIP construction, the bottom slab thickness shall be increased by 2" and the clear cover to the bottom mat of reinforcement shall be increased to 3".

Box section dimensions, materials, and reinforcement details for Box Culvert End Sections shall be according to the requirements for ASTM C 1577 as required for the design of the portion of the culvert within the limits of Precast Concrete Box Culverts except as modified herein.

The number of culvert ties shall be sufficient to engage the minimum length of culvert barrel shown within the pay limits for Precast Concrete Box Culverts and will be dependent upon the length of box culvert segments furnished by the Contractor. Culvert ties are not required for box culverts having a rise (R) less than or equal to 3 ft and a span (S) greater than or equal to 10 ft.

All costs associated with furnishing and installing or constructing the toewall and culvert ties will not be measured for payment but shall be included in the unit price for Box Culvert End Sections of the culvert number specified.

Shop drawings that detail slab thickness and reinforcement layout for the Box Culvert End Sections shall be provided to the Engineer for review and approval. Reinforcement bars not detailed herein shall be detailed with a clear distance at the end of the reinforcement not less than ½" nor more than 2". For the precast option, it shall be the Contractor's responsibility for determining a method of handling and a construction procedure shall be included on the shop drawings. The Contractor shall determine and detail in the shop drawings any necessary strengthening or stiffening provisions necessary to handle the precast segment. Any required modifications shall be at no extra charge.

The Contractor may use reinforcement bars in lieu of welded wire reinforcement (WWR). Reinforcement bars shall be limited to the sizes of #3 through #5 bars, a maximum spacing of the lesser of 8" or the member thickness, and shall result in an area of reinforcement equal to or greater than that provided by the WWR. Minimum lap lengths detailed herein are applicable to WWR and reinforcement bars.

Reinforcement (circumferential and longitudinal) in the culvert barrel portion of the end section being lapped with reinforcement from the wingwalls or bottom slab of the end section shall not be less than that required by ASTM C 1577 for the design fill height or the reinforcement detailed for the end section, whichever is greater.

One drain hole shall be provided in each wingwall for end sections of box culverts having an opening with a clear rise greater than 3 ft. The drain hole shall be located within the lower 1/3 of the clear rise of the box culvert and shall conform to the requirements of Article 503.11 of the Standard Specifications.

APRON END SECTION DIMENSIONS

Span (S)	Rise (R)	Tt	Tb	Ts	A	B	C	D	E	Concrete Cu. Yd.	Culvert Ties Required
3'-0"	2'-0"	7"	6"	4"	3'-4"	2'-2"	2'-10⅝"	4'-1"	10'-4⅝"	2.8	Yes
3'-0"	2'-0"	4"	4"	4"	3'-1"	2'-1"	2'-7⅞"	3'-9"	9'-11"	2.3	Yes
3'-0"	3'-0"	7"	6"	4"	4'-4"	2'-8"	3'-10⅝"	5'-6"	12-4⅝"	3.7	Yes
3'-0"	3'-0"	4"	4"	4"	4'-1"	2'-7"	3'-7⅞"	5'-2"	11'-11"	3.1	Yes
4'-0"	2'-0"	7.5"	6"	5"	3'-4½"	2'-2½"	2'-11⅜"	4'-2"	11'-8"	3.3	Yes
4'-0"	2'-0"	5"	5"	5"	3'-2"	2'-1"	2'-8½"	3'-10"	11'-2⅜"	2.8	Yes
4'-0"	3'-0"	7.5"	6"	5"	4'-4½"	2'-8½"	3'-11⅜"	5'-7"	13'-8⅛"	4.2	Yes
4'-0"	3'-0"	5"	5"	5"	4'-2"	2'-7"	3'-8½"	5'-3"	13'-2⅜"	3.7	Yes
4'-0"	4'-0"	7.5"	6"	5"	5'-4½"	3'-2½"	4'-11⅜"	7'-0"	15'-8⅛"	5.3	Yes
4'-0"	4'-0"	5"	5"	5"	5'-2"	3'-1"	4'-8⅝"	6'-8"	15'-2½"	4.7	Yes
5'-0"	2'-0"	8"	7"	6"	3'-5"	2'-3"	2'-11⅜"	4'-2"	12'-10"	3.9	Yes
5'-0"	2'-0"	6"	6"	6"	3'-3"	2'-2"	2'-10"	4'-0"	12'-7¼"	3.5	Yes
5'-0"	3'-0"	8"	7"	6"	4'-5"	2'-9"	3'-11⅜	5'-7"	14'-10⅛"	4.9	Yes
5'-0"	3'-0"	6"	6"	6"	4'-3"	2'-8"	3'-10"	5'-5"	14'-7¼"	4.5	Yes
5'-0"	4'-0"	8"	7"	6"	5'-5"	3'-3"	4'-11⅜"	7'-0"	16'-10⅛"	6.1	Yes
5'-0"	4'-0"	6"	6"	6"	5'-3"	3'-2"	4'-9¼"	6'-9"	16'-5⅞"	5.5	Yes
5'-0"	5'-0"	8"	7"	6"	6'-5"	3'-9"	5'-11⅜"	8'-5"	18'-10⅛"	7.4	Yes
5'-0"	5'-0"	6"	6"	6"	6'-3"	3'-8"	5'-9¼"	8'-2"	18'-5⅞"	6.8	Yes
6'-0"	2'-0"	8"	7"	7"	3'-5"	2'-3"	2'-11⅜"	4'-2"	14'-0"	4.3	Yes
6'-0"	2'-0"	7"	7"	7"	3'-4"	2'-2"	2'-10⅝"	4'-1"	13'-10⅝"	4.2	Yes
6'-0"	3'-0"	8"	7"	7"	4'-5"	2'-9"	3'-11⅜"	5'-7"	16'-0⅛"	5.4	Yes
6'-0"	3'-0"	7"	7"	7"	4'-4"	2'-8"	3'-10⅝"	5'-6"	15'-10⅝"	5.2	Yes
6'-0"	4'-0"	8"	7"	7"	5'-5"	3'-3"	4'-11⅜"	7'-0"	18'-0⅛"	6.5	Yes
6'-0"	4'-0"	7"	7"	7"	5'-4"	3'-2"	4'-10¾"	6'-11"	17'-10¾"	6.5	Yes
6'-0"	5'-0"	8"	7"	7"	6'-5"	3'-9"	5'-11⅜"	8'-5"	20'-0⅛"	8.0	Yes
6'-0"	5'-0"	7"	7"	7"	6'-4"	3'-8"	5'-10¾"	8'-4"	19'-10¾"	7.8	Yes
6'-0"	6'-0"	8"	7"	7"	7'-5"	4'-3"	6'-11½"	9'-10"	22'-0¼"	9.5	Yes
6'-0"	6'-0"	7"	7"	7"	7'-4"	4'-2"	6'-10¾"	9'-9"	21'-10¾"	9.3	Yes
7'-0"	2'-0"	8"	8"	8"	3'-5"	2'-3"	2'-11⅜"	4'-2"	15'-2"	4.9	Yes
7'-0"	3'-0"	8"	8"	8"	4'-5"	2'-9"	3'-11⅜"	5'-7"	17'-2⅛"	6.1	Yes
7'-0"	4'-0"	8"	8"	8"	5'-5"	3'-3"	4'-11⅜"	7'-0"	19'-2⅛"	7.4	Yes
7'-0"	5'-0"	8"	8"	8"	6'-5"	3'-9"	5'-11⅜"	8'-5"	21'-2⅛"	8.9	Yes
7'-0"	6'-0"	8"	8"	8"	7'-5"	4'-3"	6'-11½"	9'-10"	23'-2¼"	10.6	Yes
8'-0"	2'-0"	8"	8"	8"	3'-5"	2'-3"	2'-11⅜"	4'-2"	16'-2"	5.3	Yes
8'-0"	3'-0"	8"	8"	8"	4'-5"	2'-9"	3'-11⅜"	5'-7"	18'-2⅛"	6.5	Yes
8'-0"	4'-0"	8"	8"	8"	5'-5"	3'-3"	4'-11⅜"	7'-0"	20'-2⅛"	7.8	Yes
8'-0"	5'-0"	8"	8"	8"	6'-5"	3'-9"	5'-11⅜"	8'-5"	22'-2⅛"	9.3	Yes
8'-0"	6'-0"	8"	8"	8"	7'-5"	4'-3"	6'-11½"	9'-10"	24'-2¼"	11.0	Yes
9'-0"	2'-0"	9"	9"	9"	3'-6"	2'-3"	3'-0¾"	4'-4"	17'-6⅞"	6.2	Yes
9'-0"	3'-0"	9"	9"	9"	4'-6"	2'-9"	4'-0¾"	5'-9"	19'-6⅞"	7.5	Yes
9'-0"	4'-0"	9'	9"	9"	5'-6"	3'-3"	5'-0¾"	7'-2"	21'-6⅞"	9.0	Yes
9'-0"	5'-0"	9"	9"	9"	6'-6"	3'-9"	6'-0⅞"	8'-7"	23'-7"	10.6	Yes
9'-0"	6'-0"	9"	9"	9"	7'-6"	4'-3"	7'-0⅛"	9'-11"	25'-5⅝"	12.4	Yes
10'-0"	2'-0"	10"	10"	10"	3'-7"	2'-4"	3'-1½"	4'-5"	18'-10¼"	7.1	No
10'-0"	3'-0"	10"	10"	10"	4'-7"	2'-10"	4'-1½"	5'-10"	20'-10¼"	8.6	No
10'-0"	4'-0"	10"	10"	10"	5'-7"	3'-4"	5'-1½"	7'-3"	22'-10⅜"	10.2	Yes
10'-0"	5'-0"	10"	10"	10"	6'-7"	3'-10"	6'-1½"	8'-8"	24'-10⅜"	12.0	Yes
10'-0"	6'-0"	10"	10"	10"	7'-7"	4'-4"	7'-1½"	10'-1"	26'-10⅜"	13.9	Yes
11'-0"	2'-0"	11"	11"	11"	3'-8"	2'-4"	3'-2⅞"	4'-7"	20'-3⅛"	8.2	No
11'-0"	3'-0"	11"	11"	11"	4'-8"	2'-10"	4'-2⅞"	6'-0"	22'-3⅛"	9.8	No
11'-0"	4'-0"	11"	11"	11"	5'-8"	3'-4"	5'-2¼"	7'-4"	24'-1¾"	11.5	Yes
11'-0"	5'-0"	11"	11"	11"	6'-8"	3'-10"	6'-2¼"	8'-9"	26'-1¾"	13.3	Yes
11'-0"	6'-0"	11"	11"	11"	7'-8"	4'-4"	7'-2¼"	10'-2"	28'-1⅞"	15.5	Yes
12'-0"	2'-0"	12"	12"	12"	3'-9"	2'-5"	3'-3⅝"	4'-8"	21'-6½"	9.3	No
12'-0"	3'-0"	12"	12"	12"	4'-9"	2'-11"	4'-3⅝"	6'-1"	23'-6½"	11.1	No
12'-0"	4'-0"	12"	12"	12"	5'-9"	3'-5"	5'-3⅝"	7'-6"	25'-6⅝"	13.0	Yes
12'-0"	5'-0"	12"	12"	12"	6'-9"	3'-11"	6'-3⅝"	8'-11"	27'-6⅝"	14.1	Yes
12'-0"	6'-0"	12"	12"	12"	7'-9"	4'-5"	7'-3⅝"	10'-4"	29'-6⅝"	17.4	Yes

Note:
Two sets of apron end section dimensions are shown above for some box culvert sizes due to the top and bottom slabs having different thicknesses per ASTM C 1577 for design fill heights less than 2 ft.

(Sheet 1 of 2)

SCB-AES 5-15-2023

MODEL: Sheet
FILE NAME: Y:\IDOT\1423-07_78399\78399 DESIGN\CADD\SP SN 083-7107\0837107-78399-03-PrecastBCAEndSectDtls.dgn

3/3/2025 11:37:07 AM

ESCA CONSULTANTS, INC. CIVIL & STRUCTURAL ENGINEERS

USER NAME = nhc	DESIGNED - ELH 12/24	REVISED -			
ESCA PROJECT NO.= 1423.07	CHECKED - ARD 12/24	REVISED -			
PLOT SCALE = 0:2 ':" / in.	DRAWN - NHC 12/24	REVISED -			
PLOT DATE = 3/3/2025	CHECKED - ELH 12/24	REVISED -			

STATE OF ILLINOIS
DEPARTMENT OF TRANSPORTATION

PRECAST CONCRETE BOX CULVERT APRON END SECTION DETAILS - PROPOSED SN 083-7107

SHEET 3 OF 4 SHEETS

F.A.P. RTE.	SECTION	COUNTY	TOTAL SHEETS	SHEET NO.
132/869	1CR-1;103CR-1;103CR-2	SALINE	59	20

CONTRACT NO. 78399

ILLINOIS FED. AID PROJECT

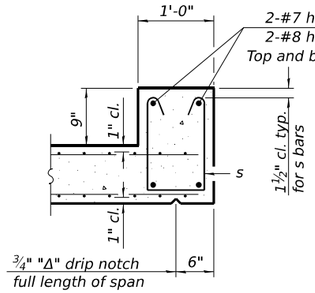

SECTION B-B
(Top slab at downstream end)

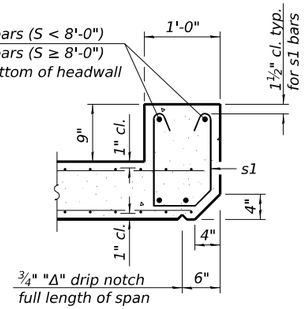

SECTION B-B
(Top slab at upstream end)

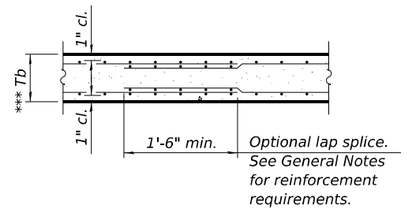

SECTION B-B
(Bottom Slab)

*** This dimension shall be increased by 2" for CIP construction.

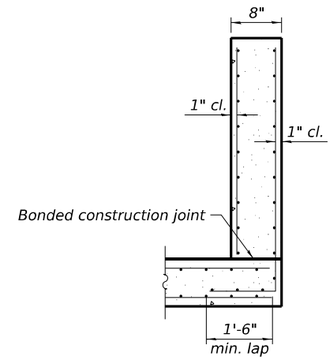

SECTION C-C

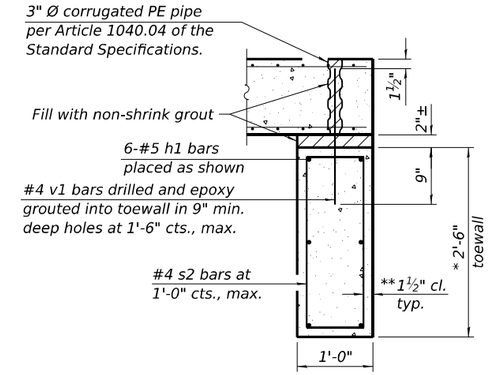

SECTION D-D

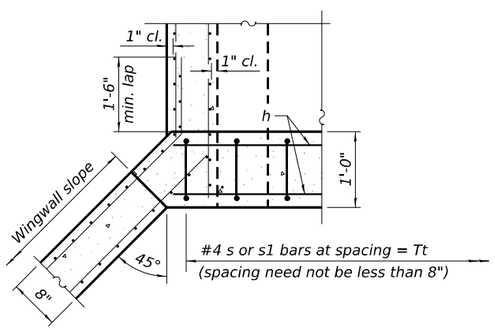

SECTION E-E

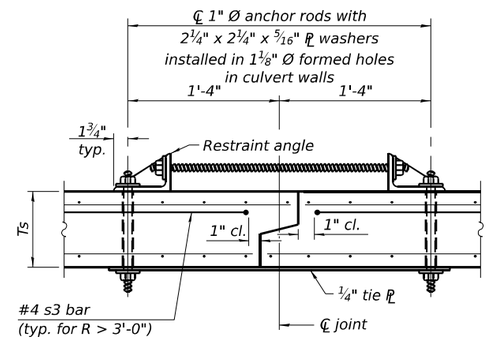

SECTION F-F
(Showing culvert tie details)

TOEWALL CONSTRUCTION SEQUENCE

1. Perform excavation and construct toewall.
2. Backfill accordingly and place bedding for precast box culvert end sections.
3. Set precast box culvert end section.
4. Drill and epoxy grout reinforcement in toewall in accordance with Section 584 of the Standard Specifications.
5. Pressure grout voids using non-shrink grout conforming to Section 1024 of the Standard Specifications.

* The Contractor may furnish a precast or cast-in-place toewall. The Contractor shall be responsible for the strength and stability of the precast toewall during handling. Additional lifting points may be required depending upon the length of the toewall or the Contractor may need to modify the design of the toewall for the proposed handling method.

** If soil conditions permit, the sides of the toewall may be poured directly against the soil. The clear cover on the sides of the toewall shall be increased to 3" by increasing the thickness of the toewall.

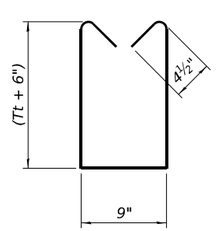

BAR s

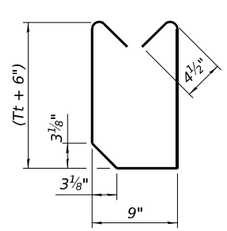

BAR s1

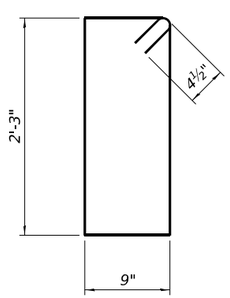

BAR s2

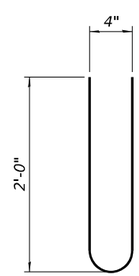

BAR s3

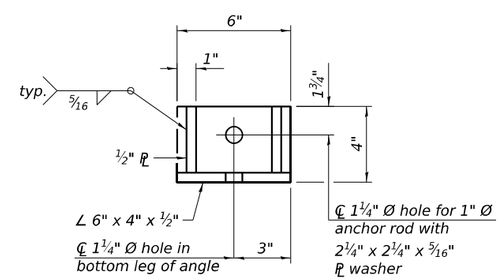

RESTRAINT ANGLE DETAIL

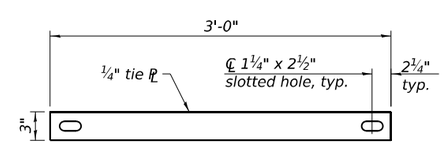

TIE PLATE DETAIL

Notes:

1" Ø anchor rods for the culvert ties shall conform to the requirements of ASTM F1554, Grade 105. Structural steel for the tie plate and restraint angle shall conform to the requirements of Article 1006.04 of the Standard Specifications. All components of the culvert tie detail shall be galvanized according to the requirements of AASHTO M 111 or M 232 as applicable. 2¼"x2¼"x5/16" plate washers shall be provided under each nut required for the anchor rods. Anchor rods connecting precast sections shall be brought to a snug tight condition followed by an additional ½ turn on one of the nuts for anchor rods installed in the walls. Match marks shall be provided on the bolt and nut to verify relative rotation between the bolt and the nut. Holes in the walls for the culvert tie assembly may be drilled using core bits in lieu of using formed holes.

SCB-AES 5-15-2023

(Sheet 2 of 2)

ESCA CONSULTANTS, INC.	USER NAME = nhc	DESIGNED - ELH 12/24	REVISED -	STATE OF ILLINOIS DEPARTMENT OF TRANSPORTATION	PRECAST CONCRETE BOX CULVERT APRON END SECTION DETAILS - PROPOSED SN 083-7107
	ESCA PROJECT NO.= 1423.07	CHECKED - ARD 12/24	REVISED -		
	PLOT SCALE = 0:2 ':" / in.	DRAWN - NHC 12/24	REVISED -		
	PLOT DATE = 3/3/2025	CHECKED - ELH 12/24	REVISED -		SHEET 4 OF 4 SHEETS

F.A.P. RTE.	SECTION	COUNTY	TOTAL SHEETS	SHEET NO.
132/869	1CR-1;103CR-1;103CR-2	SALINE	59	21
		CONTRACT NO. 78399		
		ILLINOIS FED. AID PROJECT		

MODEL: Sheet
FILE NAME: Y:\IDOT\1423-07_78399\78399 DESIGN\CADD\SP SN 083-7107\0837107-78399-04-PrecastBCAEnt\SecDtls.dgn
3/3/2025 11:37:08 AM

SN 083-7000

STATE OF ILLINOIS
STATE HIGHWAY DEPARTMENT

REINFORCED CONCRETE BOX CULVERT

FED. ROAD DIST. NO.	STATE	FED. AID PROJ. NO.	FISCAL YEAR	SHEET NO.	TOTAL SHEETS
7	ILL				

BOND ISSUE ROUTE NO.	COUNTY	SEC.	TOTAL SHEETS	SHEET NO.
143	SALINE	103A B,C	18	13

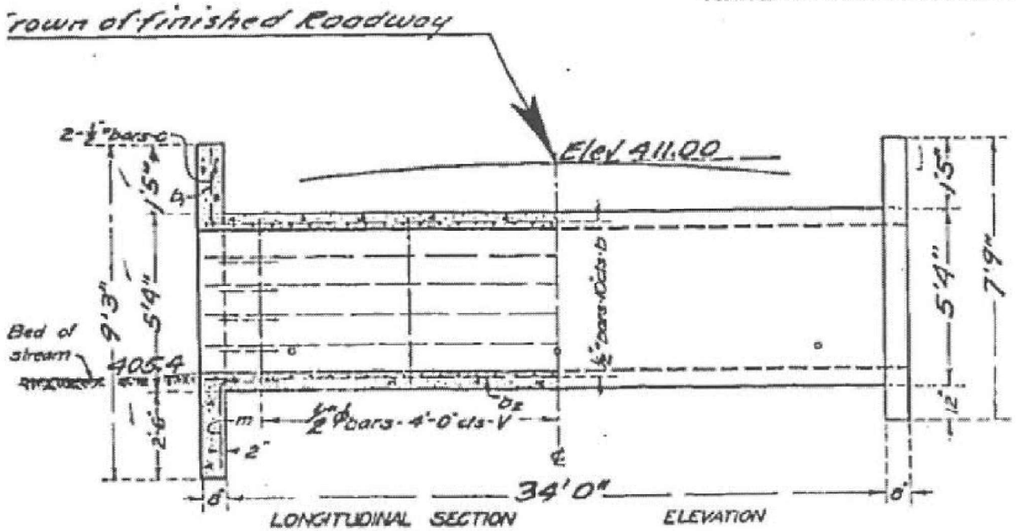

LONGITUDINAL SECTION ELEVATION

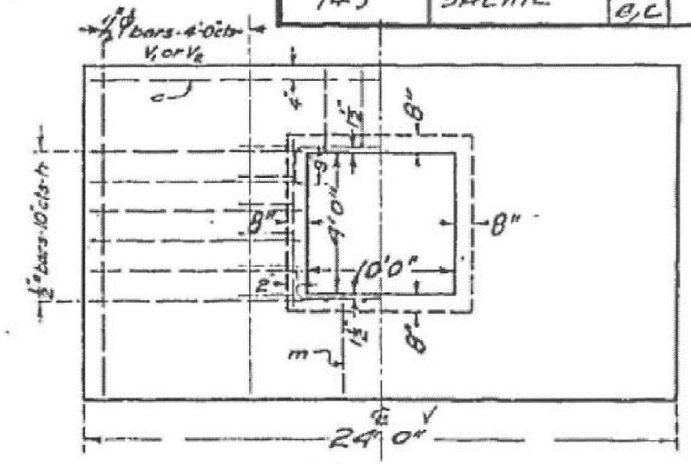

END ELEVATION
SHOWING REINFORCEMENT. SHOWING OUTLINES.

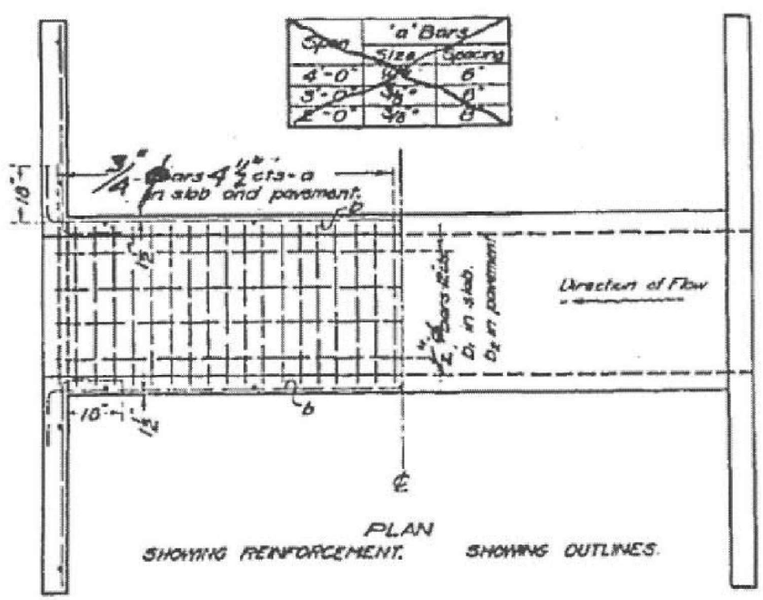

Span	'a' Bars Size	Spacing
4'-0"	~~¾"~~	~~6"~~
3'-0"	~~¾"~~	~~8"~~
2'-0"	~~¾"~~	~~8"~~

PLAN
SHOWING REINFORCEMENT. SHOWING OUTLINES.

Note.
Fill over box should be limited to 4'-0".
Maximum Clearance = 4'-0"
Use "m" bars in downstream headwall only.

BUILD TOPS OF HEAD-WALLS PARALLEL TO GRADE LINE.

ADJUST HEIGHT OF HEAD WALLS TO BE 12 INCHES ABOVE SHOULDER ELEVATION.

BILL OF MATERIAL

Bars	No.	Size	Length
V	18	½" Φ	5'0"
V₁	4	½" Φ	9'0"
V₂	4	½" Φ	7'6"
h	28	½"	8'6"
a	188	¾" Φ	12'0"
b	28	½"	20'0"
b₁	20	½" Φ	20'0"
b₂	20	½" Φ	18'6"
c	4	½"	23'6"
m	2	½"	5'0"
Steel - Lbs.			4770
Concrete - Cu Yds.			33.8

Class A concrete to be used throughout
Proportions 1 - 2¼ - 4.

S.B.I. Route 143 Sec. 103A
Saline County
Sta. 779+90

STANDARD: COMPUTED - W.O.D. & Jenk. CHECKED - R.L. Dyer. DRAWN - W.C.J. CHECKED - Jenk. Wilt.
SPECIAL: ASSEMBLED - E.H. Wilt. CHECKED - R.L. Dyer.

APPROVED: J. F. Burch, BRIDGE ENGINEER
Feb 19 1947
STATE HIGHWAY ENGINEER

PASSED: H. R. Summers
ENGINEER OF DESIGN.

618

MODEL: PLOT
FILE NAME: Y:\IDOT\1423-07_78399\78399 DESIGN\CADD\CAD_Sheets 083-7107\D978399 083-7107-sht-rem01.dgn

ESCA CONSULTANTS, INC.

USER NAME = atn	DESIGNED -	REVISED -	
ESCA PROJECT NO. = 1423.07	DRAWN - NHC	REVISED -	
	CHECKED - ELH	REVISED -	
PLOT DATE = 2/28/2025	DATE - 01/25	REVISED -	

STATE OF ILLINOIS
DEPARTMENT OF TRANSPORTATION

EXISTING STRUCTURE PLANS EX SN 083-7000
FOR INFORMATION ONLY

SCALE: NONE | SHEET 1 OF 1 SHEETS | STA. | TO STA.

F.A.P. RTE.	SECTION	COUNTY	TOTAL SHEETS	SHEET NO.
132/869	1CR-1; 103CR-1; 103CR-2	SALINE	59	22

CONTRACT NO. 78399
ILLINOIS | FED. AID PROJECT

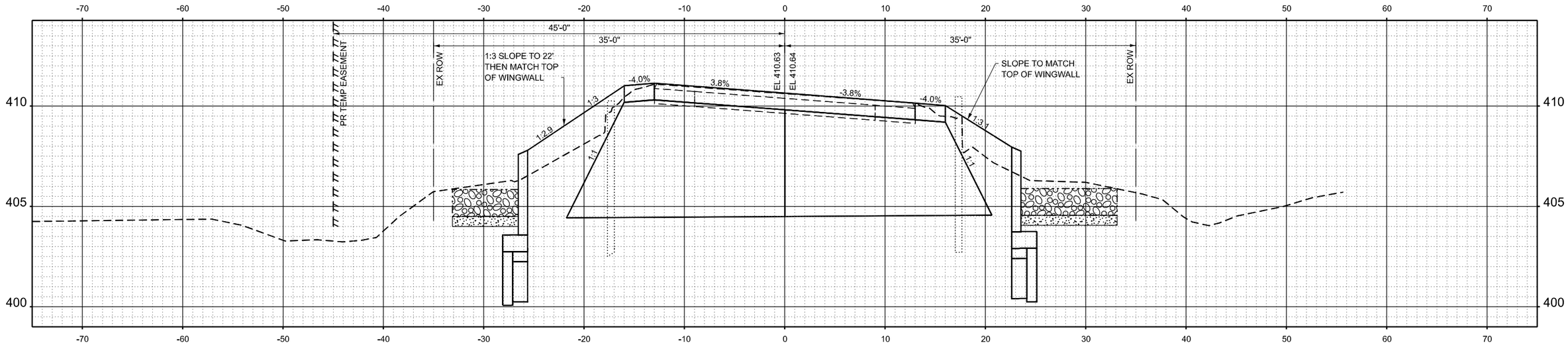

STA 779+56.00

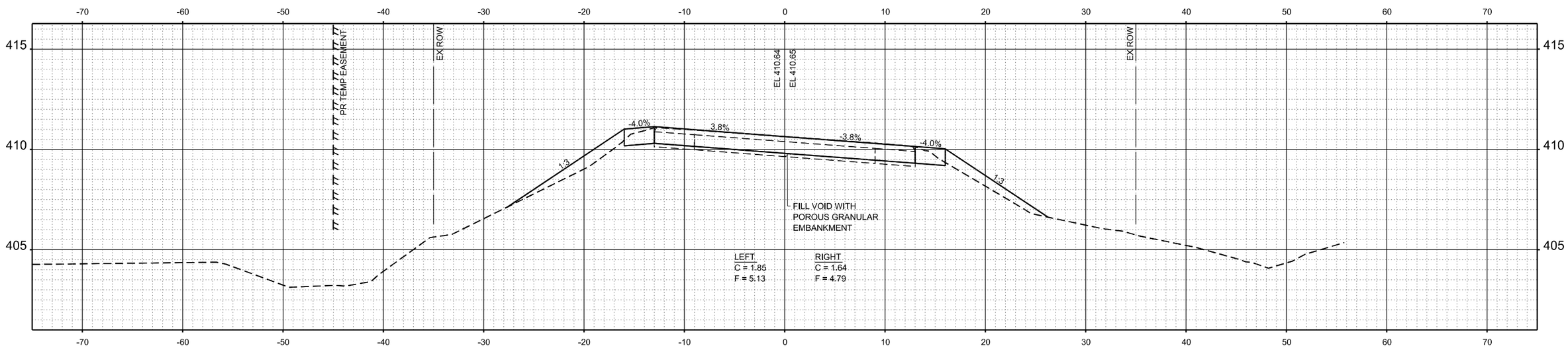

STA 779+50.00

FINAL SURVEY	BY	DATE
SURVEYED		
PLOTTED		
TEMPLATE		
AREAS		
AREAS CHECKED		
NOTE BOOK		
NO.		

ORIGINAL SURVEY	BY	DATE
SURVEYED		
PLOTTED		
TEMPLATE		
AREAS		
AREAS CHECKED		
NOTE BOOK		
NO.		

MODEL: PrCL IL 34 - 779+50.00 [Sheet]
FILE NAME: Y:\IDOT\1423-07_78399\78399 DESIGN\CADD\CAD_Sheets 083-7107\D978399 083-7107-sht-xssht.dgn

ESCA CONSULTANTS, INC.
CIVIL & STRUCTURAL ENGINEERS

USER NAME = atn	DESIGNED - ATN	REVISED -
ESCA PROJECT NO. = 1423.07	DRAWN - ATN	REVISED -
	CHECKED - ELH	REVISED -
PLOT DATE = 2/28/2025	DATE - 02/25	REVISED -

STATE OF ILLINOIS
DEPARTMENT OF TRANSPORTATION

CROSS SECTIONS
PR SN 083-7107

SCALE: AS SHOWN | SHEET 1 OF 3 SHEETS | STA. 779+50.00 TO STA. 779+56.00

F.A.P. RTE.	SECTION	COUNTY	TOTAL SHEETS	SHEET NO.
132/869	1CR-1; 103CR-1; 103CR-2	SALINE	59	23
		CONTRACT NO. 78399		
		ILLINOIS	FED. AID PROJECT	

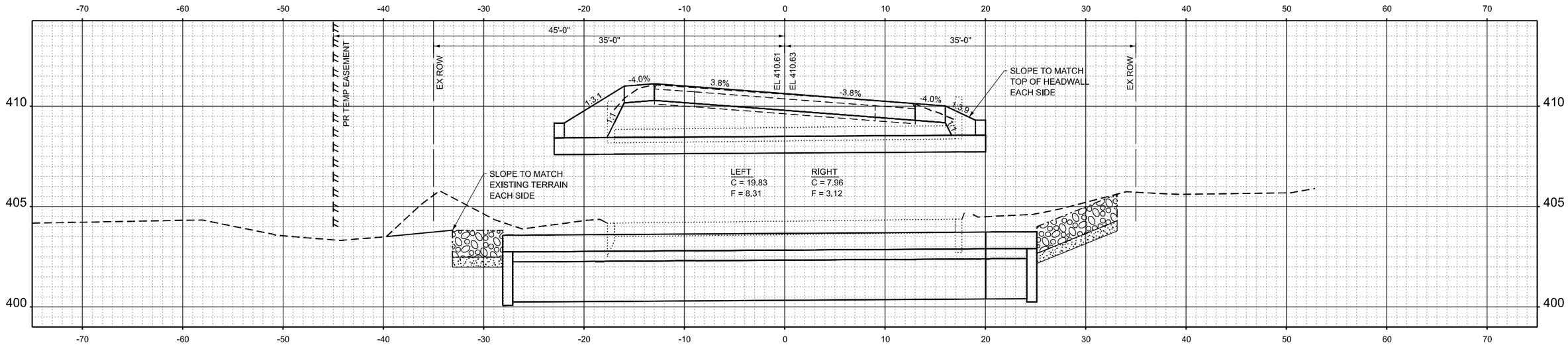

STA 779+68.00

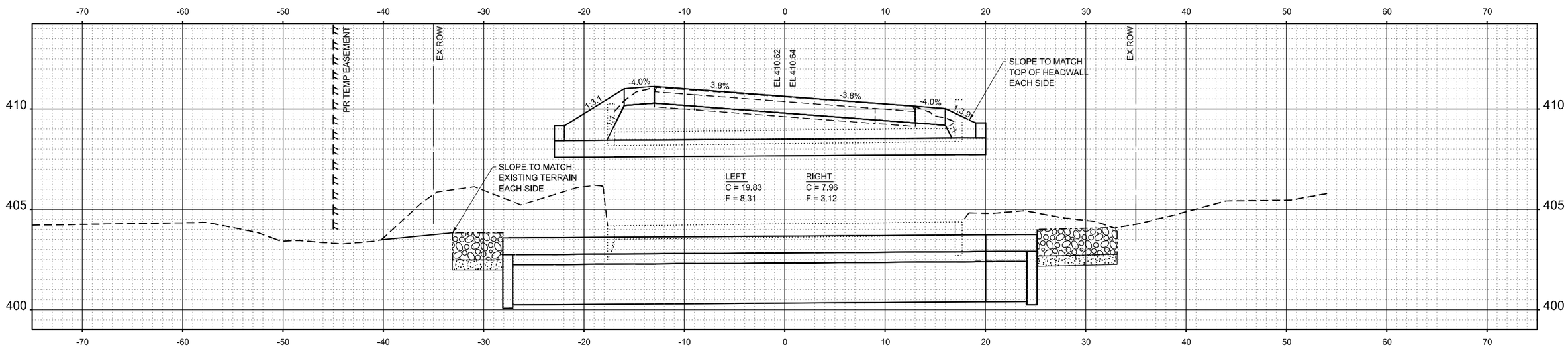

STA 779+62.00

FINAL SURVEY	BY	DATE
SURVEYED		
PLOTTED		
TEMPLATE		
AREAS		
AREAS CHECKED		
NOTE BOOK		
NO.		

ORIGINAL SURVEY	BY	DATE
SURVEYED		
PLOTTED		
TEMPLATE		
AREAS		
AREAS CHECKED		
NOTE BOOK		
NO.		

MODEL: PrCL IL 34 - 779+62.00 [Sheet]
FILE NAME: Y:\IDOT\1423-07_78399\78399 DESIGN\CADD\CAD_Sheets 083-7107\D978399 083-7107-sht-xssht.dgn

ESCA CONSULTANTS, INC.
CIVIL & STRUCTURAL ENGINEERS

USER NAME = atn	DESIGNED - ATN	REVISED -
ESCA PROJECT NO. = 1423.07	DRAWN - ATN	REVISED -
	CHECKED - ELH	REVISED -
PLOT DATE = 2/28/2025	DATE - 02/25	REVISED -

STATE OF ILLINOIS
DEPARTMENT OF TRANSPORTATION

CROSS SECTIONS
PR SN 083-7107

SCALE: AS SHOWN | SHEET 2 OF 3 SHEETS | STA. 779+62.00 TO STA. 779+68.00

F.A.P. RTE.	SECTION	COUNTY	TOTAL SHEETS	SHEET NO.
132/869	1CR-1; 103CR-1; 103CR-2	SALINE	59	24
		CONTRACT NO. 78399		
		ILLINOIS	FED. AID PROJECT	

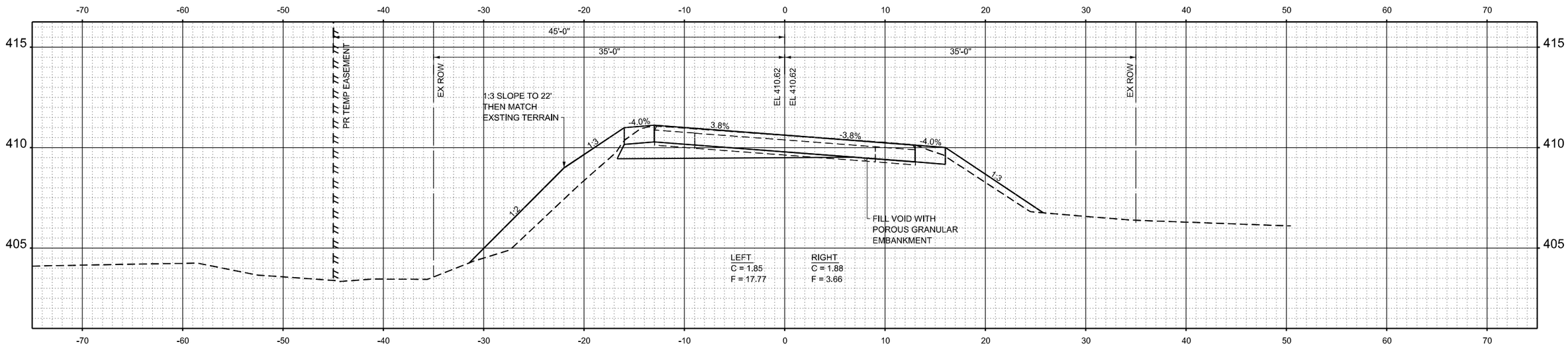

STA 779+80.00

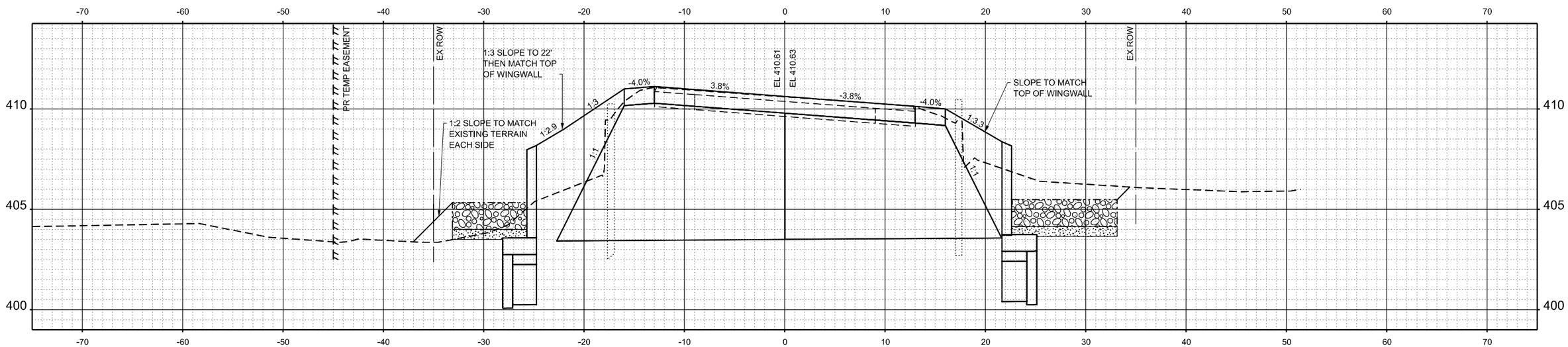

STA 779+74.00

FINAL SURVEY	BY	DATE
SURVEYED		
PLOTTED		
TEMPLATE		
AREAS		
AREAS CHECKED		
NOTE BOOK NO.		

ORIGINAL SURVEY	BY	DATE
SURVEYED		
PLOTTED		
TEMPLATE		
AREAS		
AREAS CHECKED		
NOTE BOOK NO.		

MODEL: PrCL IL 34 - 779+74.00 [Sheet]
FILE NAME: Y:\IDOT\1423-07_78399\78399 DESIGN\CADD\CAD_Sheets 083-7107\D978399 083-7107-sht-xssht.dgn

ESCA CONSULTANTS, INC.
CIVIL & STRUCTURAL ENGINEERS

USER NAME = atn	DESIGNED - ATN	REVISED -
ESCA PROJECT NO. = 1423.07	DRAWN - ATN	REVISED -
	CHECKED - ELH	REVISED -
PLOT DATE = 2/28/2025	DATE - 02/25	REVISED -

STATE OF ILLINOIS
DEPARTMENT OF TRANSPORTATION

CROSS SECTIONS
PR SN 083-7107

SCALE: AS SHOWN | SHEET 3 OF 3 SHEETS | STA. 779+74.00 TO STA. 779+80.00

F.A.P. RTE.	SECTION	COUNTY	TOTAL SHEETS	SHEET NO.
132/869	1CR-1; 103CR-1; 103CR-2	SALINE	59	25
		CONTRACT NO. 78399		
		ILLINOIS	FED. AID PROJECT	

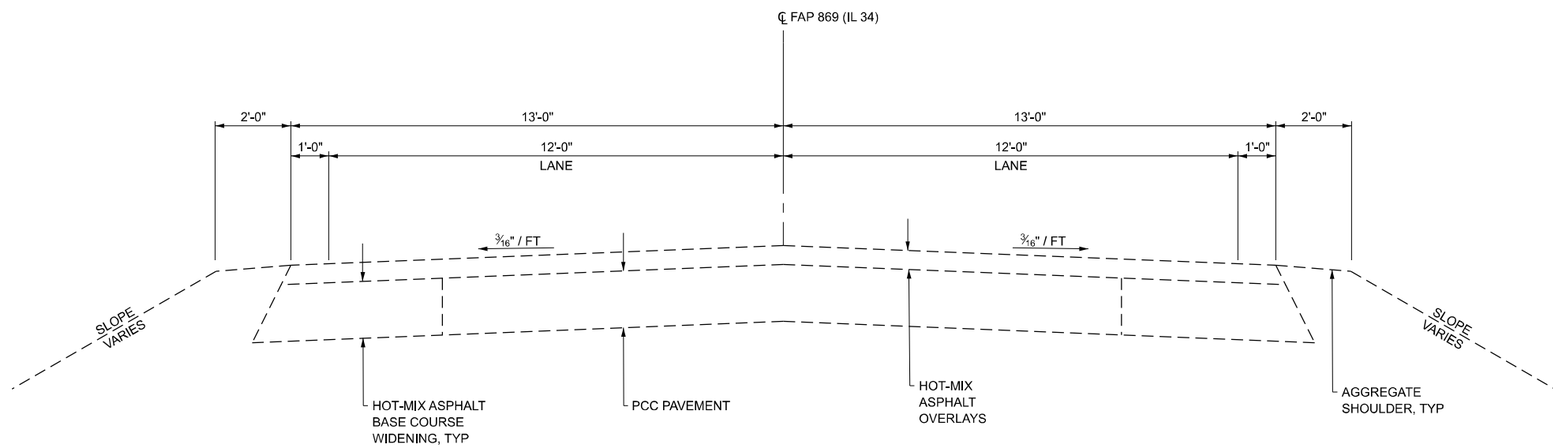

EXISTING TYPICAL SECTION
STA 827+25.00 TO STA 828+70.33
STA 828+81.67 TO STA 830+25.00

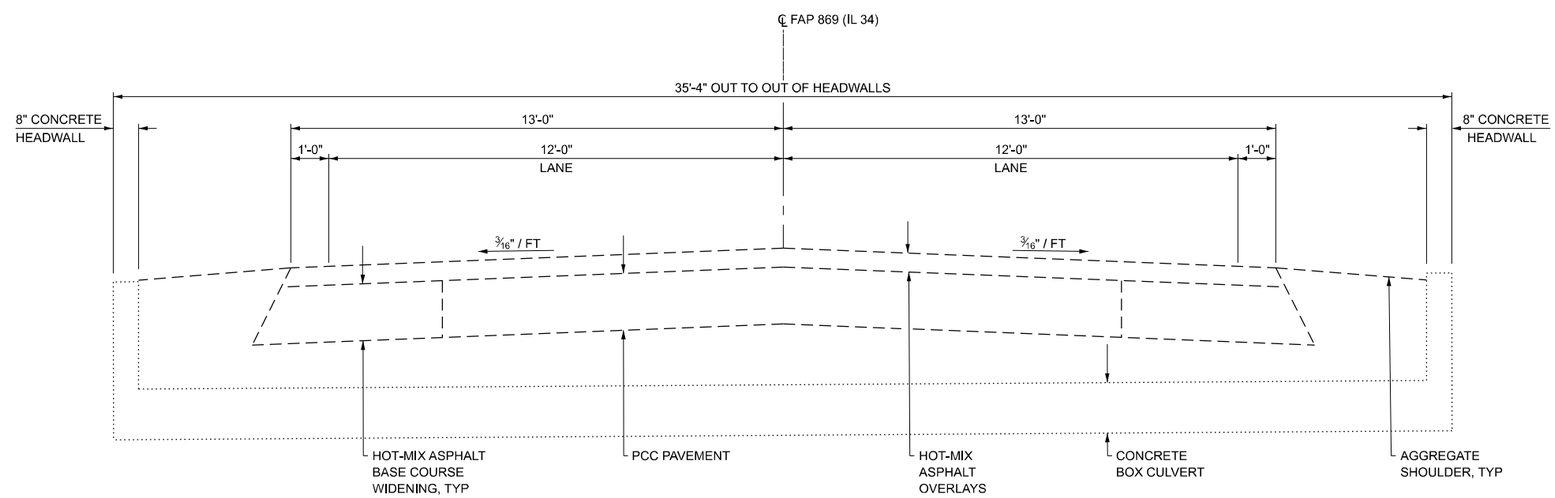

EXISTING TYPICAL SECTION
STA 828+70.33 TO STA 828+81.67

MODEL: Existing Typical Sections Sheet
FILE NAME: Y:\IDOT\1423-07_78399\78399 DESIGN\CADD\CAD_Sheets 083-7108\D978399 083-7108-sht-typical.dgn

ESCA CONSULTANTS, INC.

USER NAME = atn	DESIGNED - ATN	REVISED -	
ESCA PROJECT NO. = 1423.07	DRAWN - ATN	REVISED -	
	CHECKED - ELH	REVISED -	
PLOT DATE = 2/26/2025	DATE - 01/25	REVISED -	

STATE OF ILLINOIS
DEPARTMENT OF TRANSPORTATION

EXISTING TYPICAL SECTIONS
PR SN 083-7108

SCALE: NONE | SHEET 1 OF 1 SHEETS | STA. | TO STA.

F.A.P. RTE.	SECTION	COUNTY	TOTAL SHEETS	SHEET NO.
132/869	1CR-1; 103CR-1; 103CR-2	SALINE	59	26

CONTRACT NO. 78399

ILLINOIS | FED. AID PROJECT

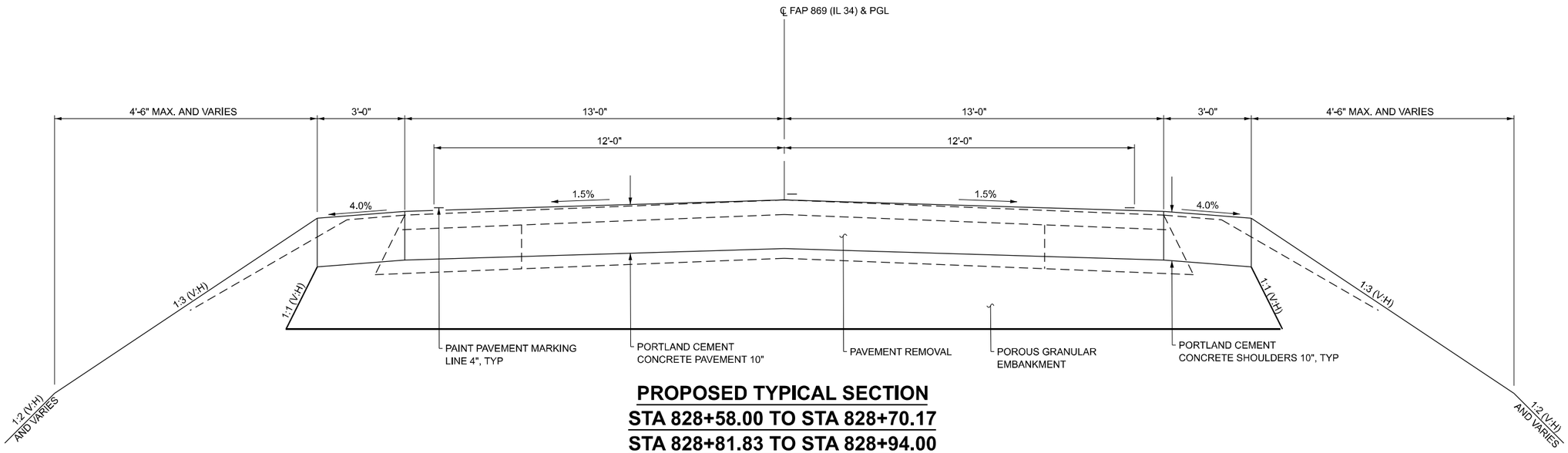

PROPOSED TYPICAL SECTION
STA 828+58.00 TO STA 828+70.17
STA 828+81.83 TO STA 828+94.00

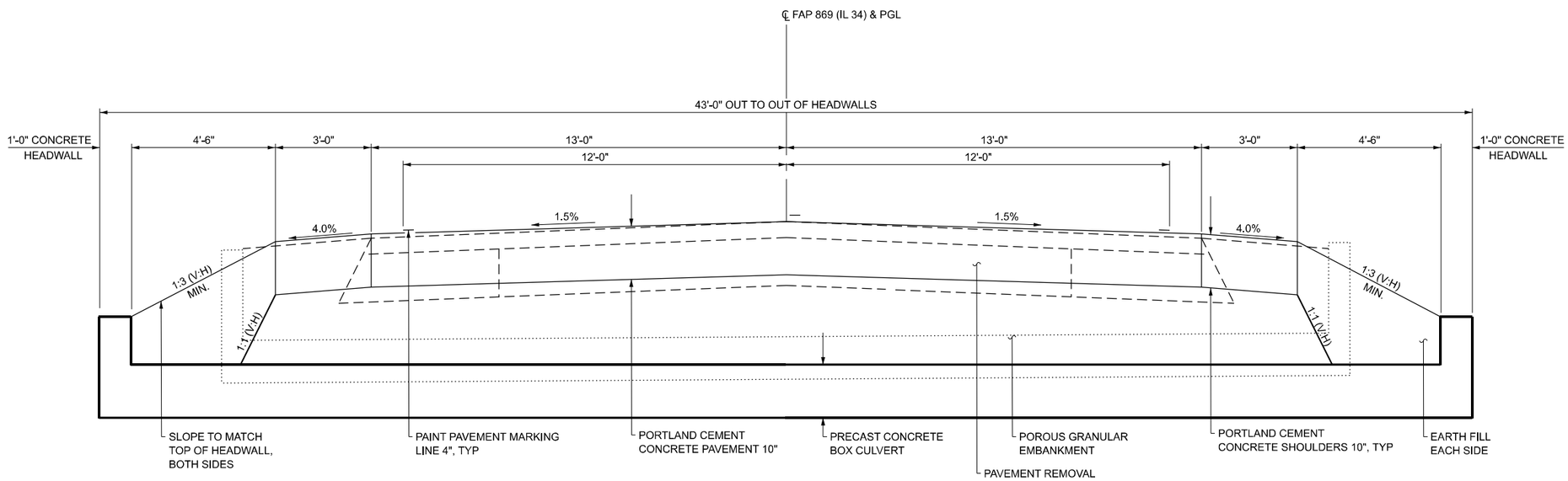

PROPOSED TYPICAL SECTION
STA 828+70.17 TO STA 828+81.83

MODEL: Proposed Typical Sections Sheet
FILE NAME: Y:\IDOT\1423-07_78399\78399 DESIGN\CADD\CAD_Sheets 083-7108\D978399 083-7108-sht-typical.dgn

ESCA CONSULTANTS, INC.

USER NAME = atn	DESIGNED - ATN	REVISED -	
ESCA PROJECT NO. = 1423.07	DRAWN - ATN	REVISED -	
	CHECKED - ELH	REVISED -	
PLOT DATE = 2/26/2025	DATE - 01/25	REVISED -	

STATE OF ILLINOIS
DEPARTMENT OF TRANSPORTATION

PROPOSED TYPICAL SECTIONS
PR SN 083-7108

SCALE: NONE | SHEET 1 OF 1 SHEETS | STA. | TO STA.

F.A.P. RTE.	SECTION	COUNTY	TOTAL SHEETS	SHEET NO.
132/869	1CR-1; 103CR-1; 103CR-2	SALINE	59	27
		CONTRACT NO. 78399		
		ILLINOIS	FED. AID PROJECT	

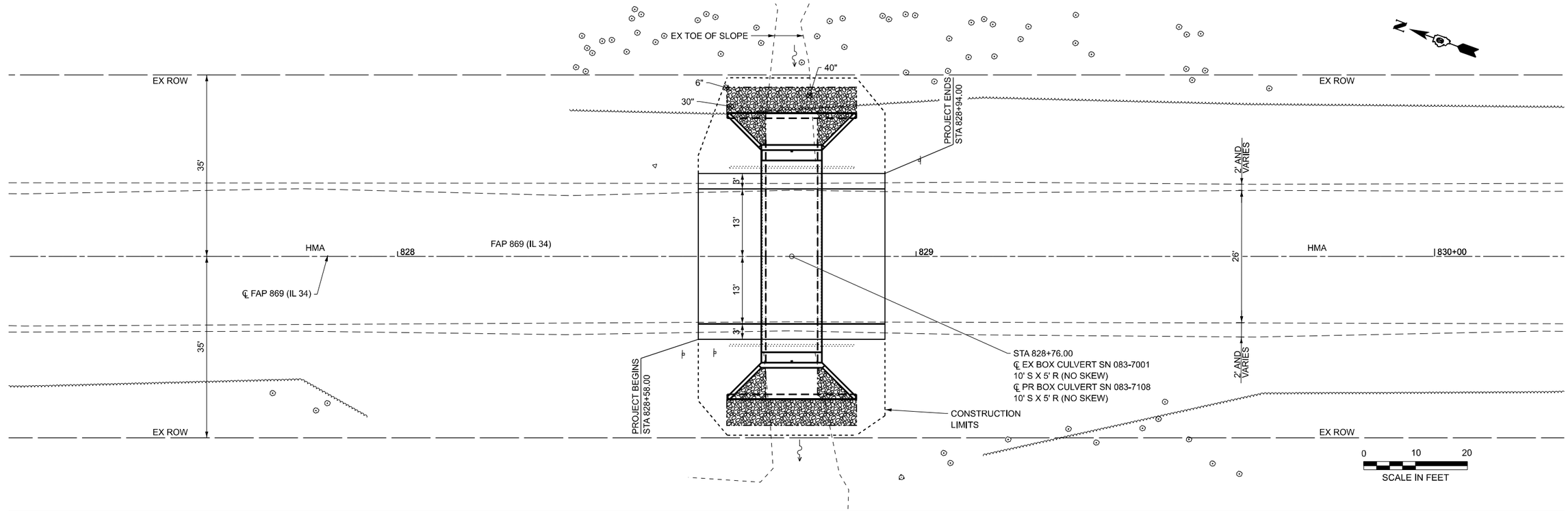

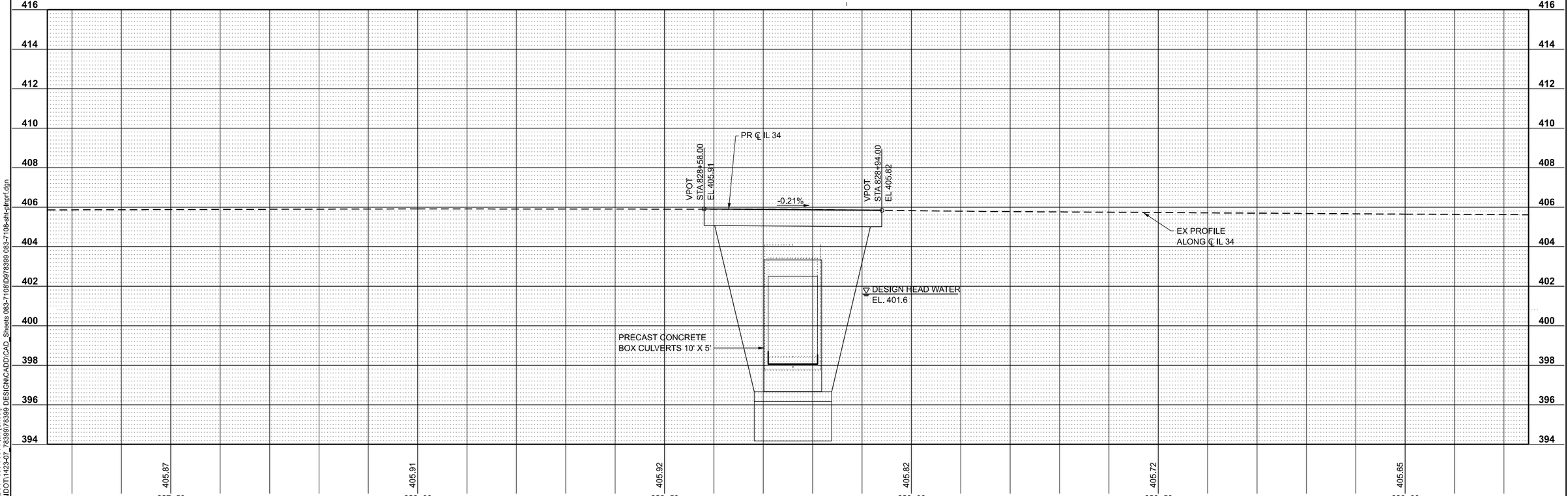

MODEL: PrCL IL 34 -083-7001 Plan [Sheet]
FILE NAME: Y:\IDOT\1423-07_78399\78399\DESIGN\CADD\CAD_Sheets 083-7108\D978399 083-7108-sht-plnprf.dgn

ESCA CONSULTANTS, INC.
CIVIL & STRUCTURAL ENGINEERS

USER NAME = atn	DESIGNED - ATN	REVISED -	
ESCA PROJECT NO. = 1423.07	DRAWN - ATN	REVISED -	
	CHECKED - ELH	REVISED -	
PLOT DATE = 2/28/2025	DATE - 01/25	REVISED -	

STATE OF ILLINOIS
DEPARTMENT OF TRANSPORTATION

PLAN AND PROFILE
PR SN 083-7108

SCALE: AS SHOWN | SHEET 1 OF 1 SHEETS | STA. 827+25.00 TO STA. 830+25.00

F.A.P. RTE.	SECTION	COUNTY	TOTAL SHEETS	SHEET NO.
132/869	1CR-1; 103CR-1; 103CR-2	SALINE	59	28

CONTRACT NO. 78399

ILLINOIS | FED. AID PROJECT

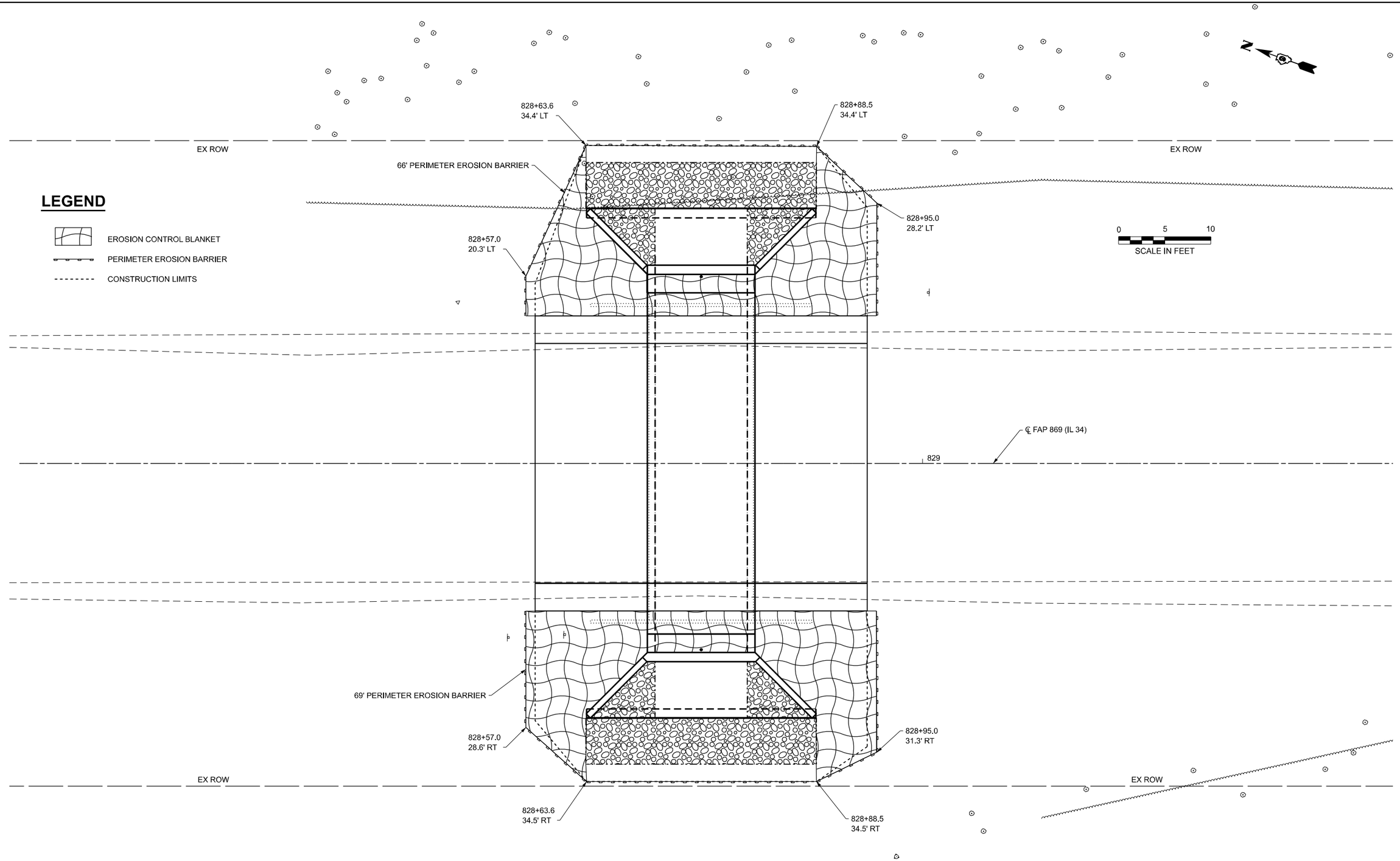

MODEL: IL34 - Erosion Control Plan [Sheet]
FILE NAME: Y:\IDOT\1423-07_78399\78399 DESIGN\CADD\CAD_Sheets 083-7108\D978399 083-7108-sht-eros.dgn

ESCA CONSULTANTS, INC.

USER NAME = atn	DESIGNED - ATN	REVISED -	
ESCA PROJECT NO. = 1423.07	DRAWN - ATN	REVISED -	
	CHECKED - ELH	REVISED -	
PLOT DATE = 2/26/2025	DATE - 02/25	REVISED -	

STATE OF ILLINOIS
DEPARTMENT OF TRANSPORTATION

EROSION CONTROL PLAN
PR SN 083-7108

SCALE: AS SHOWN | SHEET 1 OF 1 SHEETS | STA. 828+01.00 TO STA. 829+51.00

F.A.P. RTE.	SECTION	COUNTY	TOTAL SHEETS	SHEET NO.
132/869	1CR-1; 103CR-1; 103CR-2	SALINE	59	29
		CONTRACT NO. 78399		
		ILLINOIS	FED. AID PROJECT	

Benchmark: BM083-0401 – IDOT monument in SE quadrant of intersection of IL Route 34 and McFarland Road, elev. 402.172 (NAVD 88).

Existing Structure: SN 083-7001 was likely built in 1928. There are no existing plans available. It is a single-barrel, 10' span by 5' rise, cast-in-place concrete culvert that is 35'-4" long. The culvert is not skewed. A short-term road closure will be used, and traffic will use a temporary detour route.

No Salvage.

WATERWAY INFORMATION

Drainage Area = 55 acres		Low EOP elev. 405.63 at sta. 828+76		
Flood	Freq. Yr.	Q C.F.S.	Headwater Elevation Existing	Headwater Elevation Proposed
	10	77	401.2	401.1
Design	50	105	401.6	401.5
Base	100	121	401.8	401.7
Max. Calc.	500	150	402.2	402.0

INDEX OF SHEETS

GENERAL NOTES

The design fill height for this box is 2.6 ft. maximum and 2.1 ft. minimum. The precast box culvert sections shall conform to the requirements of ASTM C 1577.

Drain holes shall be provided on exterior culvert walls for each precast box segment with a clear rise greater than 3 ft. The drain hole shall be located within the lower ⅓ of the clear rise of the box culvert, shall not intercept the haunch, and shall conform to the requirements of Article 503.11 of the Standard Specifications.

Nonwoven geotextile fabric shall conform to the requirements of Art. 1080.01 of the Standard Specifications. The minimum weight of the fabric shall be 6 ounces per square yard.

Precast concrete box culverts and box culvert end sections shall be backfilled with Porous Granular Embankment in the required excavation areas on the sides of the box culvert from the bottom of the proposed pavement to the bottom of the box culvert. This area of PGE is included in the Porous Granular Embankment pay item. The 6-inch thick layer of porous granular material required under the precast concrete box culvert, according to Section 540.06 of the Standard Specifications, shall also apply to the end sections. Cost of this porous granular material will not be paid for separately but shall be included in the unit price of the work for which it is required.

If the Contractor elects to use cast-in-place construction for the end sections, any temporary soil retention required will be at the Contractor's expense.

Layout of the slope protection system may be varied to suit ground conditions in the field as directed by the Engineer.

The Contractor shall halt the excavation at the bottom of the 6" porous granular material under the culvert and request a soils test from IDOT District 9. The District Geotechnical Engineer will evaluate the need for additional excavation and determine the limits of Rock Fill.

Geocomposite Wall Drain shall be according to Section 591 of the Standard Specifications, except that concrete nails shall not be used in areas where it overlaps Membrane Waterproofing System for Buried Structures.

The Porous Granular Embankment shall be CA-7 or CA-11 and capped with 1'-0" minimum thickness CA-6 or CA-10 directly underneath the proposed concrete pavement. The outer 3'-0" of the culvert shall be backfilled with impervious material at each end.

The removal of the existing box culvert, headwalls, and wingwalls is included in Removal of Existing Structures.

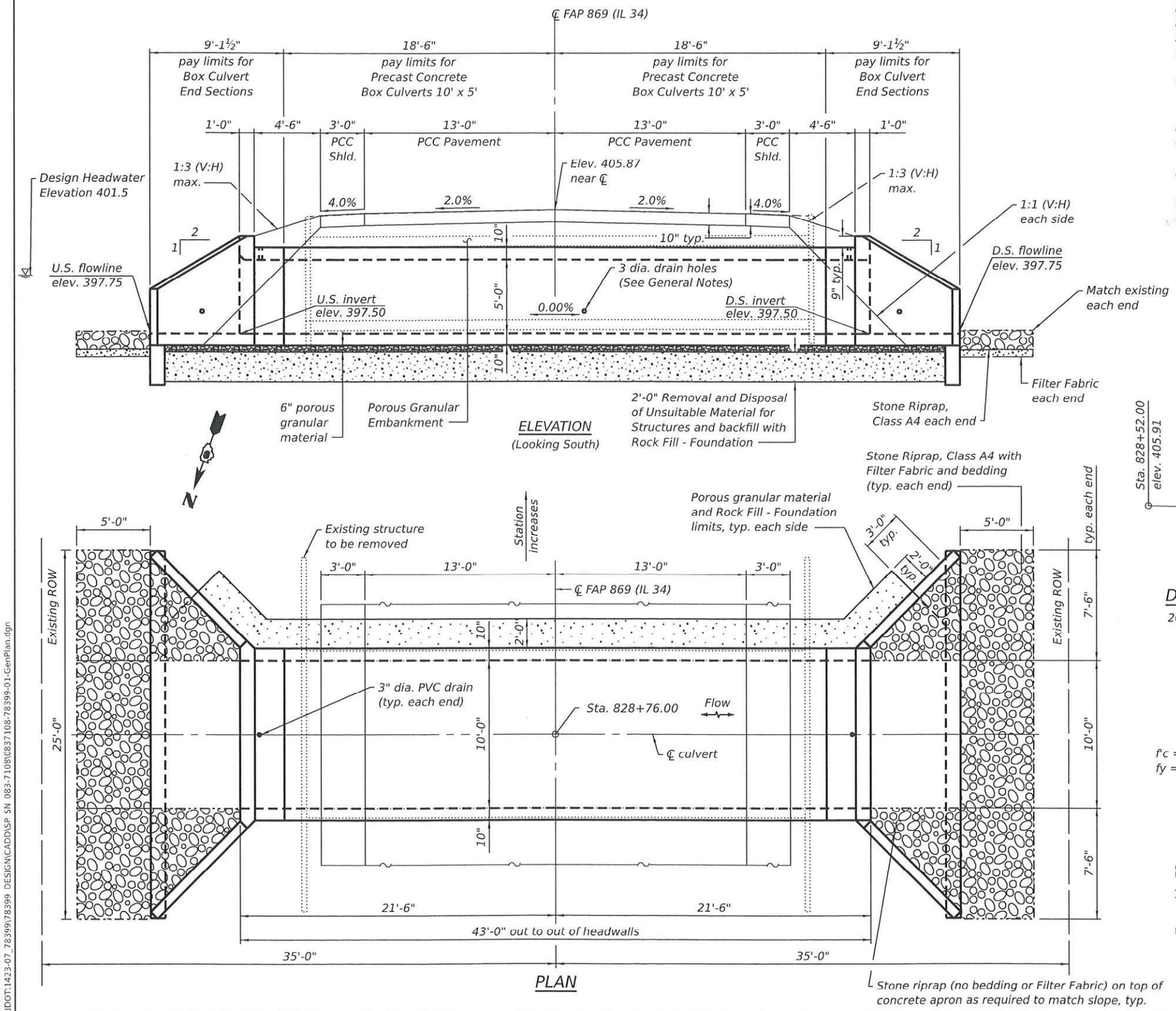

IL 34 PROFILE GRADE

(Along ℄ roadway)

DESIGN SPECIFICATIONS

2020 AASHTO LRFD Bridge Design Specifications, 9th Edition

LOADING HL-93

DESIGN STRESSES

PRECAST UNITS

f'c = 5,000 psi
fy = 65,000 psi (welded wire reinforcement)

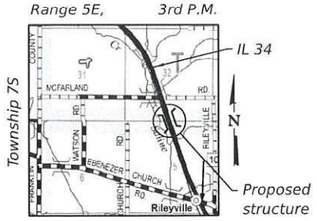

LOCATION SKETCH

STATE OF ILLINOIS
ERIC L. HEWKEN
No. 081-006159
LICENSED STRUCTURAL ENGINEER
EXPIRES 11-30-2026
SIGNATURE
03-03-25
DATE

TOTAL BILL OF MATERIAL

ITEM	UNIT	TOTAL
Porous Granular Embankment	Cu. Yd.	167
Stone Riprap, Class A4	Sq. Yd.	42
Filter Fabric	Sq. Yd.	30
Removal of Existing Structures No.2	Each	1
Removal and Disposal of Unsuitable Material for Structures	Cu. Yd.	67
Box Culvert End Sections, Culvert No. 2	Each	2
Precast Concrete Box Culverts 10' x 5'	Foot	37
Geocomposite Wall Drain	Sq. Yd.	63
Membrane Waterproofing System for Buried Structures	Sq. Yd.	63
Rock Fill - Foundation	Ton	100

GENERAL PLAN AND ELEVATION
IL RTE. 34 OVER CREEK
FAP RTE. 869 SEC. 103CR-2
SALINE COUNTY
STATION 828+76.00
PROPOSED SN 083-7108

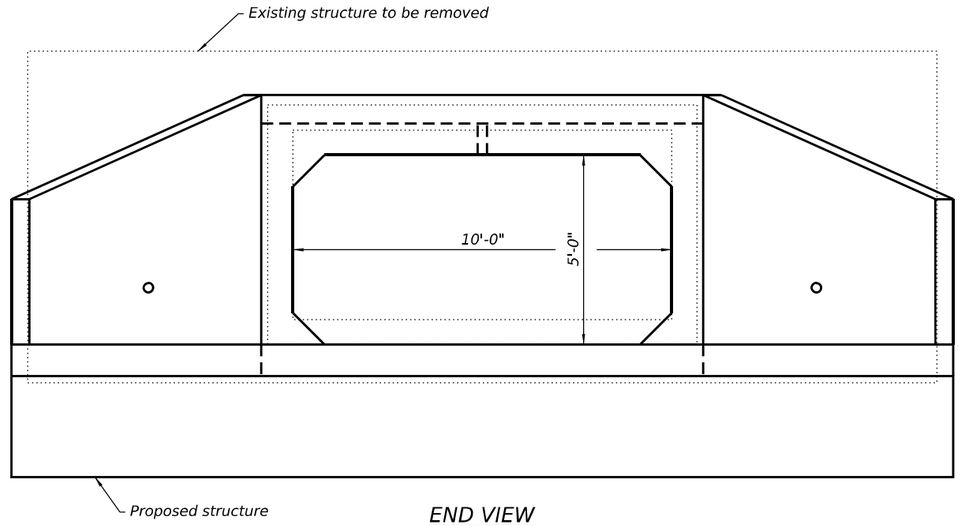

END VIEW

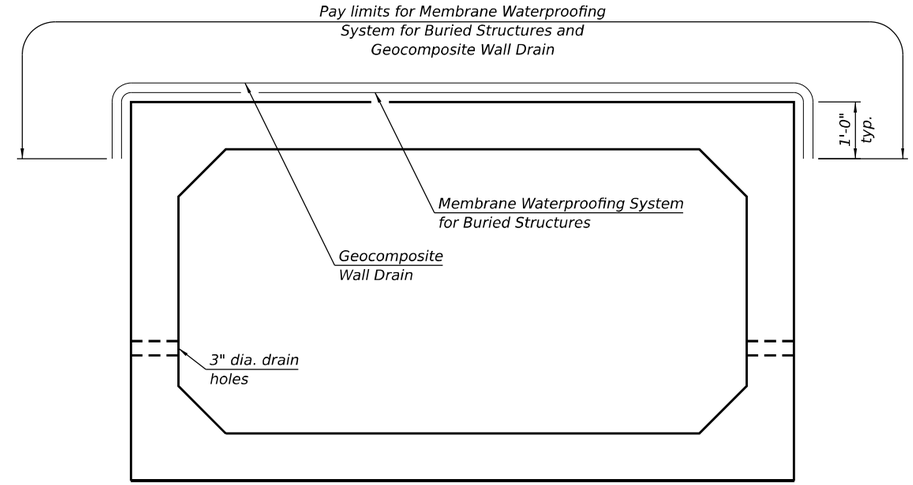

WATERPROOFING SECTION THRU CULVERT

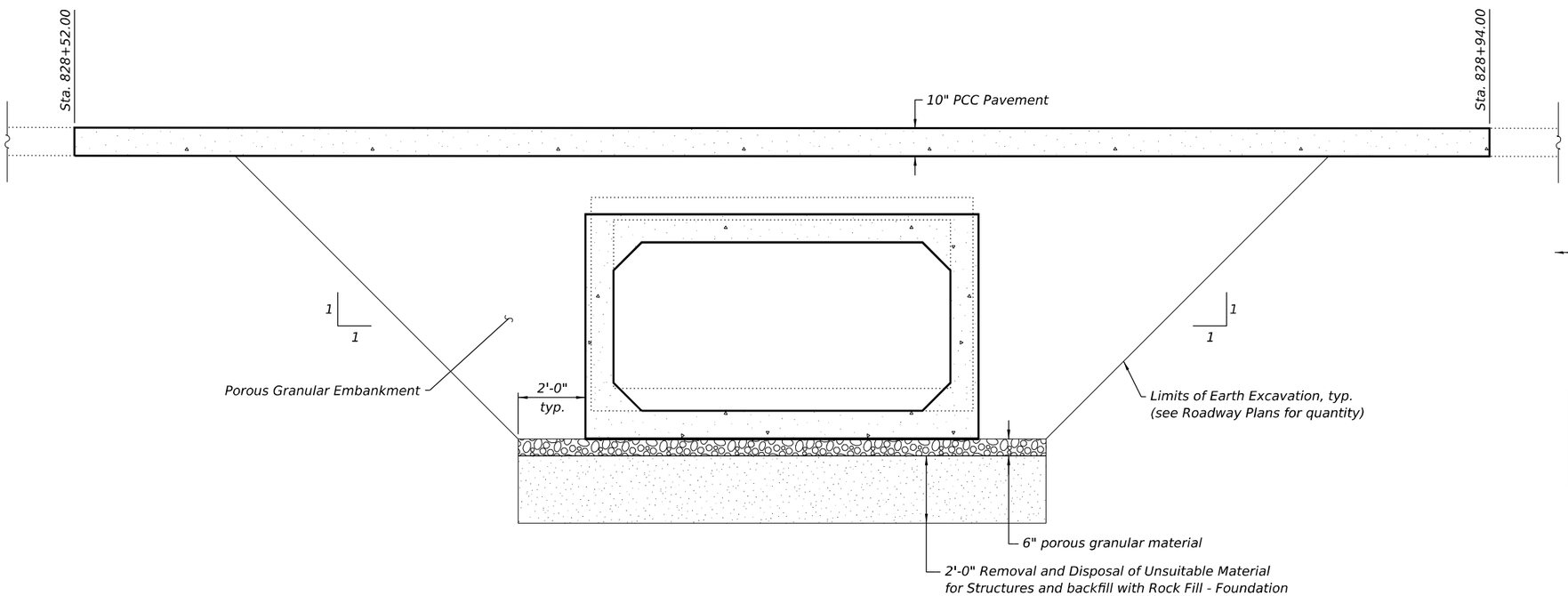

SECTION ALONG ROADWAY SHOWING POROUS GRANULAR EMBANKMENT

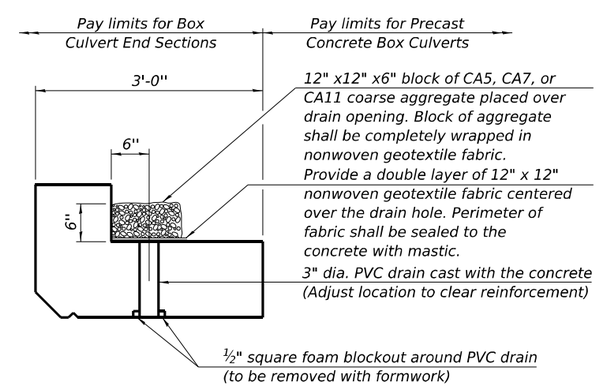

DRAIN DETAIL

(All costs associated with furnishing and constructing the above drain detail will not be measured for payment but shall be included in the contract unit price for the associated work.)

MODEL: Sheet
FILE NAME: Y:\IDOT\1423-07_78399\78399 DESIGN\CADD\SP SN 083-7108\0837108-78399-02-GenData.dgn

ESCA CONSULTANTS, INC. CIVIL & STRUCTURAL ENGINEERS	USER NAME = nhc	DESIGNED -	ELH	12/24	REVISED -	STATE OF ILLINOIS DEPARTMENT OF TRANSPORTATION	GENERAL DATA PROPOSED SN 083-7108	F.A.P. RTE.	SECTION	COUNTY	TOTAL SHEETS / SHEET NO.
	ESCA PROJECT NO.= 1423.07	CHECKED -	ARD	12/24	REVISED -			132/869	1CR-1;103CR-1;103CR-2	SALINE	59 / 31
	PLOT SCALE = 0:2 ':" / in.	DRAWN -	NHC	02/25	REVISED -					CONTRACT NO. 78399	
	PLOT DATE = 3/3/2025	CHECKED -	ELH	02/25	REVISED -		SHEET 2 OF 4 SHEETS		ILLINOIS	FED. AID PROJECT	

3/3/2025 11:47:03 AM

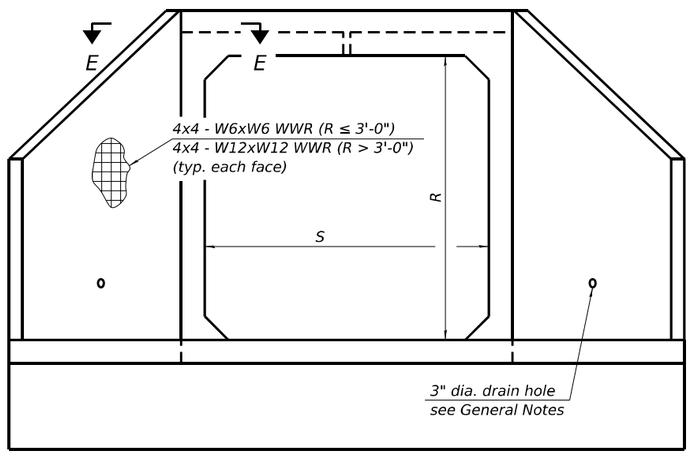

END VIEW

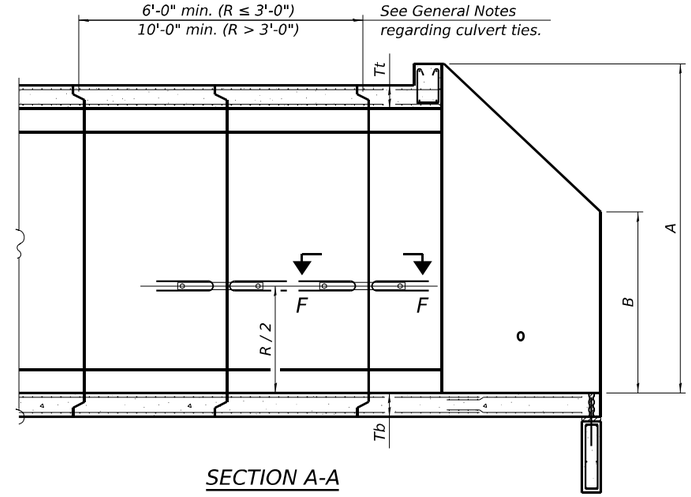

SECTION A-A

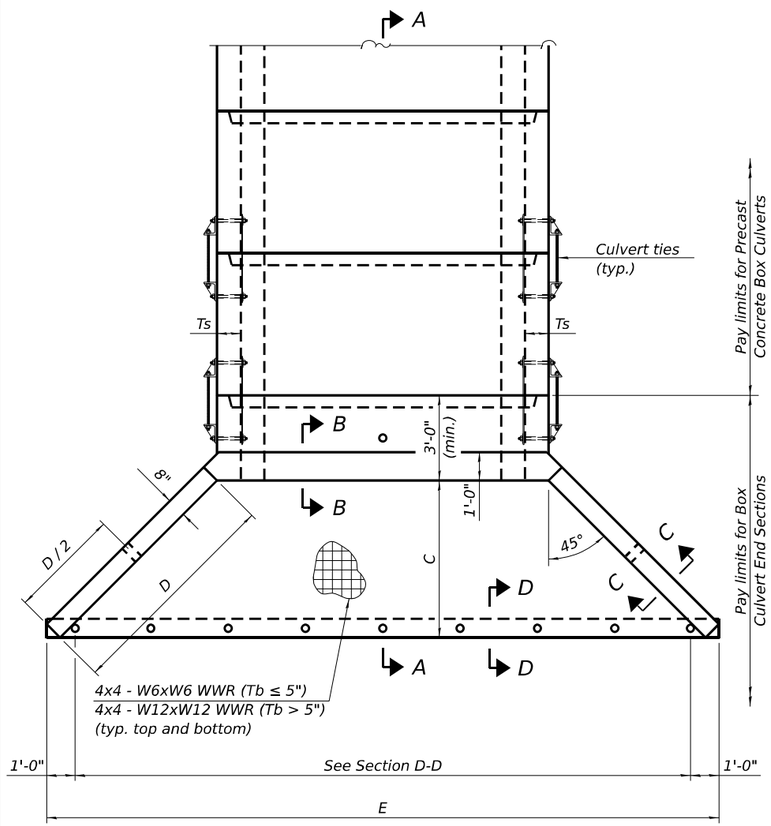

PLAN

GENERAL NOTES

Box Culvert End Sections shall be constructed according to the requirements of Section 540 of the Standard Specifications except as modified herein. End sections will be paid for at the contract unit price per each for Box Culvert End Sections.

The Contractor may furnish the end section as a single precast concrete piece or construct the end section in the field using cast-in-place (CIP) construction. For CIP construction, the bottom slab thickness shall be increased by 2" and the clear cover to the bottom mat of reinforcement shall be increased to 3".

Box section dimensions, materials, and reinforcement details for Box Culvert End Sections shall be according to the requirements for ASTM C 1577 as required for the design of the portion of the culvert within the limits of Precast Concrete Box Culverts except as modified herein.

The number of culvert ties shall be sufficient to engage the minimum length of culvert barrel shown within the pay limits for Precast Concrete Box Culverts and will be dependent upon the length of box culvert segments furnished by the Contractor. Culvert ties are not required for box culverts having a rise (R) less than or equal to 3 ft and a span (S) greater than or equal to 10 ft.

All costs associated with furnishing and installing or constructing the toewall and culvert ties will not be measured for payment but shall be included in the unit price for Box Culvert End Sections of the culvert number specified.

Shop drawings that detail slab thickness and reinforcement layout for the Box Culvert End Sections shall be provided to the Engineer for review and approval. Reinforcement bars not detailed herein shall be detailed with a clear distance at the end of the reinforcement not less than ½" nor more than 2". For the precast option, it shall be the Contractor's responsibility for determining a method of handling and a construction procedure shall be included on the shop drawings. The Contractor shall determine and detail in the shop drawings any necessary strengthening or stiffening provisions necessary to handle the precast segment. Any required modifications shall be at no extra charge.

The Contractor may use reinforcement bars in lieu of welded wire reinforcement (WWR). Reinforcement bars shall be limited to the sizes of #3 through #5 bars, a maximum spacing of the lesser of 8" or the member thickness, and shall result in an area of reinforcement equal to or greater than that provided by the WWR. Minimum lap lengths detailed herein are applicable to WWR and reinforcement bars.

Reinforcement (circumferential and longitudinal) in the culvert barrel portion of the end section being lapped with reinforcement from the wingwalls or bottom slab of the end section shall not be less than that required by ASTM C 1577 for the design fill height or the reinforcement detailed for the end section, whichever is greater.

One drain hole shall be provided in each wingwall for end sections of box culverts having an opening with a clear rise greater than 3 ft. The drain hole shall be located within the lower 1/3 of the clear rise of the box culvert and shall conform to the requirements of Article 503.11 of the Standard Specifications.

APRON END SECTION DIMENSIONS

Span (S)	Rise (R)	Tt	Tb	Ts	A	B	C	D	E	Concrete Cu. Yd.	Culvert Ties Required
3'-0"	2'-0"	7"	6"	4"	3'-4"	2'-2"	2'-10⅝"	4'-1"	10'-4⅝"	2.8	Yes
3'-0"	2'-0"	4"	4"	4"	3'-1"	2'-1"	2'-7⅞"	3'-9"	9'-11"	2.3	Yes
3'-0"	3'-0"	7"	6"	4"	4'-4"	2'-8"	3'-10⅝"	5'-6"	12-4⅝"	3.7	Yes
3'-0"	3'-0"	4"	4"	4"	4'-1"	2'-7"	3'-7⅞"	5'-2"	11'-11"	3.1	Yes
4'-0"	2'-0"	7.5"	6"	5"	3'-4½"	2'-2½"	2'-11⅜"	4'-2"	11'-8"	3.3	Yes
4'-0"	2'-0"	5"	5"	5"	3'-2"	2'-1"	2'-8½"	3'-10"	11'-2⅜"	2.8	Yes
4'-0"	3'-0"	7.5"	6"	5"	4'-4½"	2'-8½"	3'-11⅜"	5'-7"	13'-8⅛"	4.2	Yes
4'-0"	3'-0"	5"	5"	5"	4'-2"	2'-7"	3'-8½"	5'-3"	13'-2⅜"	3.7	Yes
4'-0"	4'-0"	7.5"	6"	5"	5'-4½"	3'-2½"	4'-11⅜"	7'-0"	15'-8⅛"	5.3	Yes
4'-0"	4'-0"	5"	5"	5"	5'-2"	3'-1"	4'-8⅝"	6'-8"	15'-2½"	4.7	Yes
5'-0"	2'-0"	8"	7"	6"	3'-5"	2'-3"	2'-11⅜"	4'-2"	12'-10"	3.9	Yes
5'-0"	2'-0"	6"	6"	6"	3'-3"	2'-2"	2'-10"	4'-0"	12'-7¼"	3.5	Yes
5'-0"	3'-0"	8"	7"	6"	4'-5"	2'-9"	3'-11⅜	5'-7"	14'-10⅛"	4.9	Yes
5'-0"	3'-0"	6"	6"	6"	4'-3"	2'-8"	3'-10"	5'-5"	14'-7¼"	4.5	Yes
5'-0"	4'-0"	8"	7"	6"	5'-5"	3'-3"	4'-11⅜"	7'-0"	16'-10⅛"	6.1	Yes
5'-0"	4'-0"	6"	6"	6"	5'-3"	3'-2"	4'-9¼"	6'-9"	16'-5⅞"	5.5	Yes
5'-0"	5'-0"	8"	7"	6"	6'-5"	3'-9"	5'-11⅜"	8'-5"	18'-10⅛"	7.4	Yes
5'-0"	5'-0"	6"	6"	6"	6'-3"	3'-8"	5'-9¼"	8'-2"	18'-5⅞"	6.8	Yes
6'-0"	2'-0"	8"	7"	7"	3'-5"	2'-3"	2'-11⅜"	4'-2"	14'-0"	4.3	Yes
6'-0"	2'-0"	7"	7"	7"	3'-4"	2'-2"	2'-10⅝"	4'-1"	13'-10⅝"	4.2	Yes
6'-0"	3'-0"	8"	7"	7"	4'-5"	2'-9"	3'-11⅜"	5'-7"	16'-0⅛"	5.4	Yes
6'-0"	3'-0"	7"	7"	7"	4'-4"	2'-8"	3'-10⅝"	5'-6"	15'-10⅝"	5.2	Yes
6'-0"	4'-0"	8"	7"	7"	5'-5"	3'-3"	4'-11⅜"	7'-0"	18'-0⅛"	6.5	Yes
6'-0"	4'-0"	7"	7"	7"	5'-4"	3'-2"	4'-10¾"	6'-11"	17'-10¾"	6.5	Yes
6'-0"	5'-0"	8"	7"	7"	6'-5"	3'-9"	5'-11⅜"	8'-5"	20'-0⅛"	8.0	Yes
6'-0"	5'-0"	7"	7"	7"	6'-4"	3'-8"	5'-10¾"	8'-4"	19'-10¾"	7.8	Yes
6'-0"	6'-0"	8"	7"	7"	7'-5"	4'-3"	6'-11½"	9'-10"	22'-0¼"	9.5	Yes
6'-0"	6'-0"	7"	7"	7"	7'-4"	4'-2"	6'-10¾"	9'-9"	21'-10¾"	9.3	Yes
7'-0"	2'-0"	8"	8"	8"	3'-5"	2'-3"	2'-11⅜"	4'-2"	15'-2"	4.9	Yes
7'-0"	3'-0"	8"	8"	8"	4'-5"	2'-9"	3'-11⅜"	5'-7"	17'-2⅛"	6.1	Yes
7'-0"	4'-0"	8"	8"	8"	5'-5"	3'-3"	4'-11⅜"	7'-0"	19'-2⅛"	7.4	Yes
7'-0"	5'-0"	8"	8"	8"	6'-5"	3'-9"	5'-11⅜"	8'-5"	21'-2⅛"	8.9	Yes
7'-0"	6'-0"	8"	8"	8"	7'-5"	4'-3"	6'-11½"	9'-10"	23'-2¼"	10.6	Yes
8'-0"	2'-0"	8"	8"	8"	3'-5"	2'-3"	2'-11⅜"	4'-2"	16'-2"	5.3	Yes
8'-0"	3'-0"	8"	8"	8"	4'-5"	2'-9"	3'-11⅜"	5'-7"	18'-2⅛"	6.5	Yes
8'-0"	4'-0"	8"	8"	8"	5'-5"	3'-3"	4'-11⅜"	7'-0"	20'-2⅛"	7.8	Yes
8'-0"	5'-0"	8"	8"	8"	6'-5"	3'-9"	5'-11⅜"	8'-5"	22'-2⅛"	9.3	Yes
8'-0"	6'-0"	8"	8"	8"	7'-5"	4'-3"	6'-11½"	9'-10"	24'-2¼"	11.0	Yes
9'-0"	2'-0"	9"	9"	9"	3'-6"	2'-3"	3'-0¾"	4'-4"	17'-6⅞"	6.2	Yes
9'-0"	3'-0"	9"	9"	9"	4'-6"	2'-9"	4'-0¾"	5'-9"	19'-6⅞"	7.5	Yes
9'-0"	4'-0"	9'	9"	9"	5'-6"	3'-3"	5'-0¾"	7'-2"	21'-6⅞"	9.0	Yes
9'-0"	5'-0"	9"	9"	9"	6'-6"	3'-9"	6'-0⅞"	8'-7"	23'-7"	10.6	Yes
9'-0"	6'-0"	9"	9"	9"	7'-6"	4'-3"	7'-0⅛"	9'-11"	25'-5⅝"	12.4	Yes
10'-0"	2'-0"	10"	10"	10"	3'-7"	2'-4"	3'-1½"	4'-5"	18'-10¼"	7.1	No
10'-0"	3'-0"	10"	10"	10"	4'-7"	2'-10"	4'-1½"	5'-10"	20'-10¼"	8.6	No
10'-0"	4'-0"	10"	10"	10"	5'-7"	3'-4"	5'-1½"	7'-3"	22'-10⅜"	10.2	Yes
10'-0"	5'-0"	10"	10"	10"	6'-7"	3'-10"	6'-1½"	8'-8"	24'-10⅜"	12.0	Yes
10'-0"	6'-0"	10"	10"	10"	7'-7"	4'-4"	7'-1½"	10'-1"	26'-10⅜"	13.9	Yes
11'-0"	2'-0"	11"	11"	11"	3'-8"	2'-4"	3'-2⅞"	4'-7"	20'-3⅛"	8.2	No
11'-0"	3'-0"	11"	11"	11"	4'-8"	2'-10"	4'-2⅞"	6'-0"	22'-3⅛"	9.8	No
11'-0"	4'-0"	11"	11"	11"	5'-8"	3'-4"	5'-2¼"	7'-4"	24'-1¾"	11.5	Yes
11'-0"	5'-0"	11"	11"	11"	6'-8"	3'-10"	6'-2¼"	8'-9"	26'-1¾"	13.3	Yes
11'-0"	6'-0"	11"	11"	11"	7'-8"	4'-4"	7'-2¼"	10'-2"	28'-1⅞"	15.5	Yes
12'-0"	2'-0"	12"	12"	12"	3'-9"	2'-5"	3'-3⅝"	4'-8"	21'-6½"	9.3	No
12'-0"	3'-0"	12"	12"	12"	4'-9"	2'-11"	4'-3⅝"	6'-1"	23'-6½"	11.1	No
12'-0"	4'-0"	12"	12"	12"	5'-9"	3'-5"	5'-3⅝"	7'-6"	25'-6⅝"	13.0	Yes
12'-0"	5'-0"	12"	12"	12"	6'-9"	3'-11"	6'-3⅝"	8'-11"	27'-6⅝"	14.1	Yes
12'-0"	6'-0"	12"	12"	12"	7'-9"	4'-5"	7'-3⅝"	10'-4"	29'-6⅝"	17.4	Yes

Note:
Two sets of apron end section dimensions are shown above for some box culvert sizes due to the top and bottom slabs having different thicknesses per ASTM C 1577 for design fill heights less than 2 ft.

(Sheet 1 of 2)

SCB-AES 5-15-2023

MODEL: Sheet
FILE NAME: Y:\IDOT\1423-07_78399\78399 DESIGN\CADD\SP SN 083-7108\0837108-78399-03-PrecastBCAEndSectDtls.dgn
3/3/2025 11:47:04 AM

ESCA CONSULTANTS, INC. CIVIL & STRUCTURAL ENGINEERS

USER NAME = nhc	DESIGNED - ELH 12/24	REVISED -	STATE OF ILLINOIS DEPARTMENT OF TRANSPORTATION	PRECAST CONCRETE BOX CULVERT APRON END SECTION DETAILS - PROPOSED SN 083-7108	
ESCA PROJECT NO.= 1423.07	CHECKED - ARD 12/24	REVISED -			
PLOT SCALE = 0:2 ':" / in.	DRAWN - NHC 12/24	REVISED -			
PLOT DATE = 3/3/2025	CHECKED - ELH 12/24	REVISED -		SHEET 3 OF 4 SHEETS	

F.A.P. RTE.	SECTION	COUNTY	TOTAL SHEETS	SHEET NO.
132/869	1CR-1;103CR-1;103CR-2	SALINE	59	32
		CONTRACT NO. 78399		
	ILLINOIS	FED. AID PROJECT		

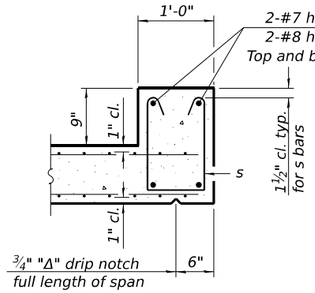

SECTION B-B
(Top slab at downstream end)

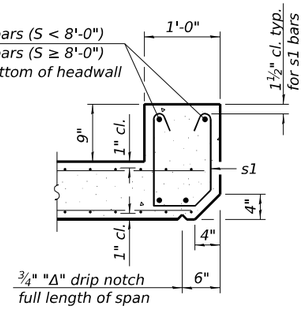

SECTION B-B
(Top slab at upstream end)

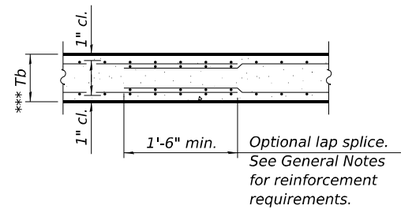

SECTION B-B
(Bottom Slab)

*** This dimension shall be increased by 2" for CIP construction.

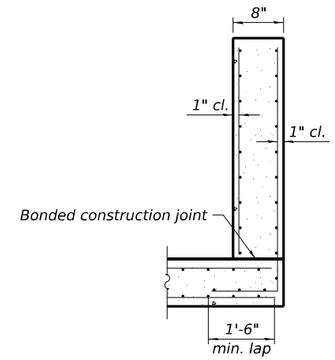

SECTION C-C

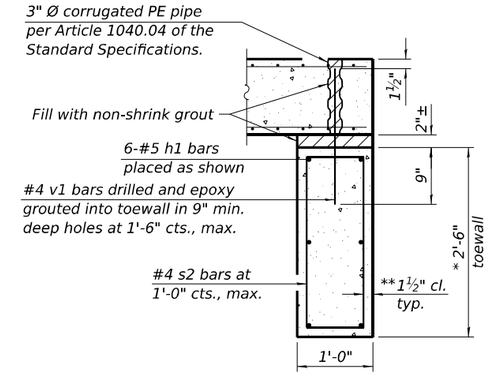

SECTION D-D

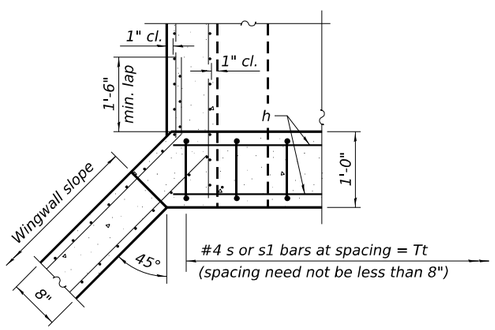

SECTION E-E

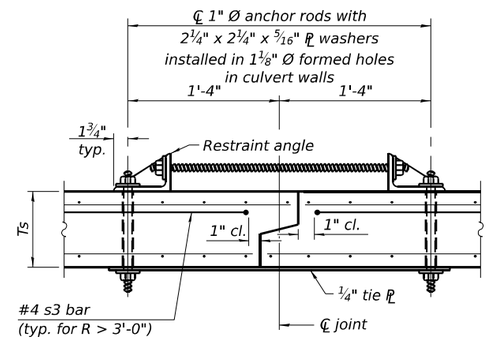

SECTION F-F
(Showing culvert tie details)

TOEWALL CONSTRUCTION SEQUENCE

1. Perform excavation and construct toewall.
2. Backfill accordingly and place bedding for precast box culvert end sections.
3. Set precast box culvert end section.
4. Drill and epoxy grout reinforcement in toewall in accordance with Section 584 of the Standard Specifications.
5. Pressure grout voids using non-shrink grout conforming to Section 1024 of the Standard Specifications.

* The Contractor may furnish a precast or cast-in-place toewall. The Contractor shall be responsible for the strength and stability of the precast toewall during handling. Additional lifting points may be required depending upon the length of the toewall or the Contractor may need to modify the design of the toewall for the proposed handling method.

** If soil conditions permit, the sides of the toewall may be poured directly against the soil. The clear cover on the sides of the toewall shall be increased to 3" by increasing the thickness of the toewall.

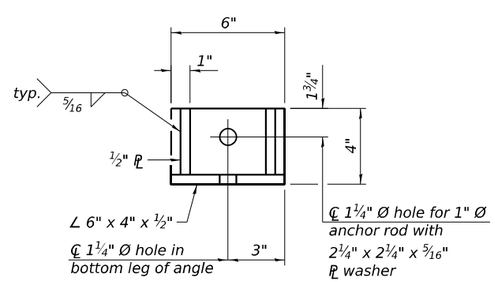

RESTRAINT ANGLE DETAIL

Notes:

1" Ø anchor rods for the culvert ties shall conform to the requirements of ASTM F1554, Grade 105. Structural steel for the tie plate and restraint angle shall conform to the requirements of Article 1006.04 of the Standard Specifications. All components of the culvert tie detail shall be galvanized according to the requirements of AASHTO M 111 or M 232 as applicable. 2¼"x2¼"x5/16" plate washers shall be provided under each nut required for the anchor rods. Anchor rods connecting precast sections shall be brought to a snug tight condition followed by an additional ½ turn on one of the nuts for anchor rods installed in the walls. Match marks shall be provided on the bolt and nut to verify relative rotation between the bolt and the nut. Holes in the walls for the culvert tie assembly may be drilled using core bits in lieu of using formed holes.

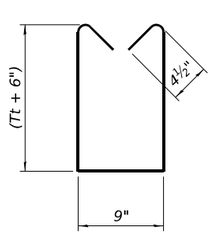

BAR s

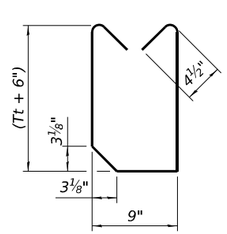

BAR s1

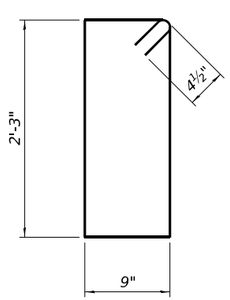

BAR s2

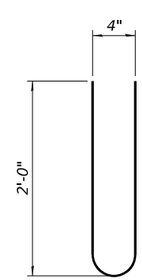

BAR s3

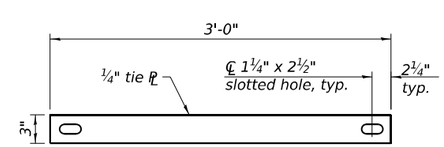

TIE PLATE DETAIL

SCB-AES 5-15-2023

(Sheet 2 of 2)

ESCA CONSULTANTS, INC.	USER NAME = nhc	DESIGNED - ELH 12/24	REVISED -	STATE OF ILLINOIS DEPARTMENT OF TRANSPORTATION	PRECAST CONCRETE BOX CULVERT APRON END SECTION DETAILS - PROPOSED SN 083-7108	F.A.P. RTE.	SECTION	COUNTY	TOTAL SHEETS	SHEET NO.
	ESCA PROJECT NO.= 1423.07	CHECKED - ARD 12/24	REVISED -			132/869	1CR-1;103CR-1;103CR-2	SALINE	59	33
	PLOT SCALE = 0:2 ':" / in.	DRAWN - NHC 12/24	REVISED -					CONTRACT NO. 78399		
	PLOT DATE = 3/3/2025	CHECKED - ELH 12/24	REVISED -		SHEET 4 OF 4 SHEETS			ILLINOIS FED. AID PROJECT		

MODEL: Sheet
FILE NAME: Y:\IDOT\1423-07_78399\78399 DESIGN\CADD\SP SN 083-7108\0837108-78399-04-PrecastBCAE\n5SecDtls.dgn
3/3/2025 11:47:05 AM

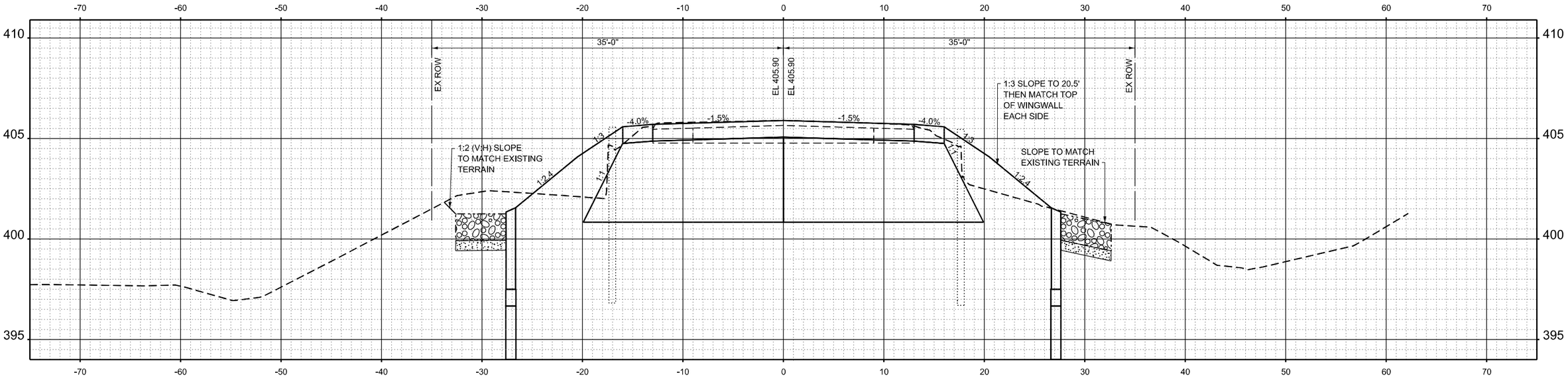

STA 828+64.00

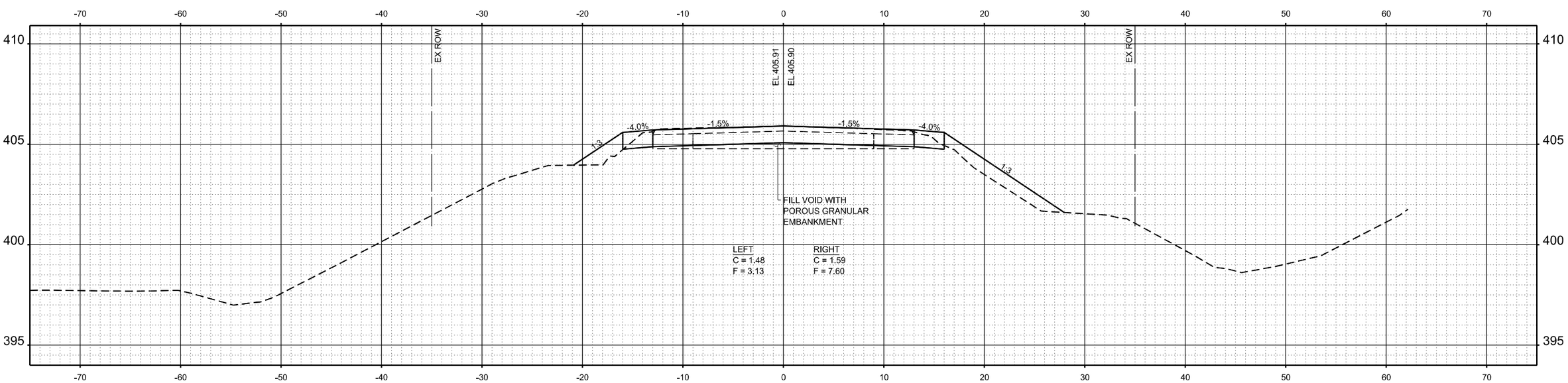

STA 828+60.00

FINAL SURVEY		BY	DATE
NOTE BOOK	SURVEYED		
	PLOTTED		
	TEMPLATE		
	AREAS		
NO.	AREAS CHECKED		

ORIGINAL SURVEY		BY	DATE
NOTE BOOK	SURVEYED		
	PLOTTED		
	TEMPLATE		
	AREAS		
NO.	AREAS CHECKED		

MODEL: PrCL IL 34 - 828+60.00 [Sheet]
FILE NAME: Y:\IDOT\1423-07_78399\78399 DESIGN\CADD\CAD_Sheets 083-7108\D978399 083-7108-sht-xssht.dgn

ESCA CONSULTANTS, INC.
CIVIL & STRUCTURAL ENGINEERS

USER NAME = atn	DESIGNED - ATN	REVISED -
ESCA PROJECT NO. = 1423.07	DRAWN - ATN	REVISED -
	CHECKED - ELH	REVISED -
PLOT DATE = 2/28/2025	DATE - 02/25	REVISED -

STATE OF ILLINOIS
DEPARTMENT OF TRANSPORTATION

CROSS SECTIONS
PR SN 083-7108

SCALE: AS SHOWN | SHEET 1 OF 3 SHEETS | STA. 828+60.00 TO STA. 828+64.00

F.A.P. RTE.	SECTION	COUNTY	TOTAL SHEETS	SHEET NO.
132/869	1CR-1; 103CR-1; 103CR-2	SALINE	59	34

CONTRACT NO. 78399

ILLINOIS | FED. AID PROJECT

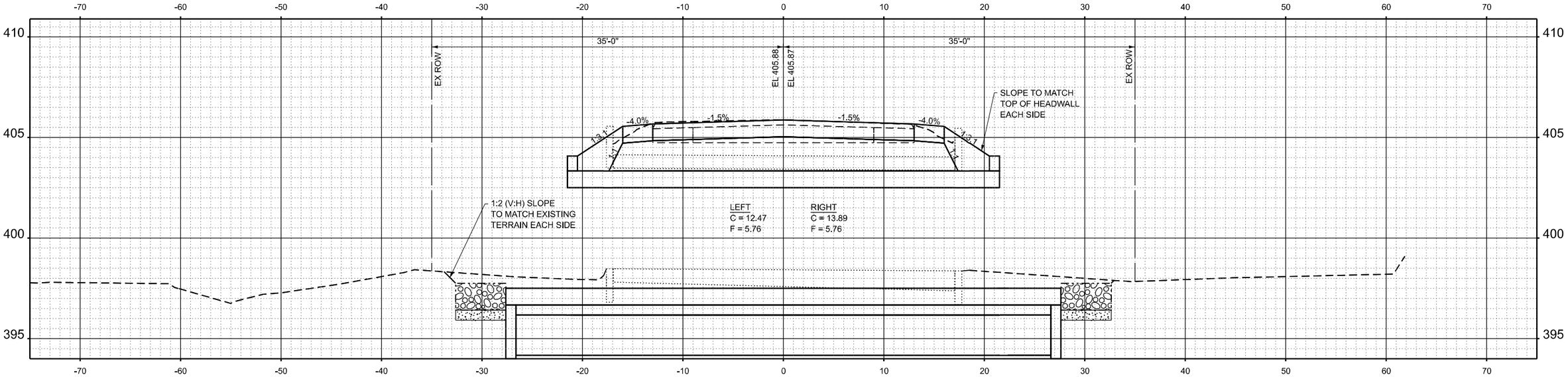

STA 828+80.00

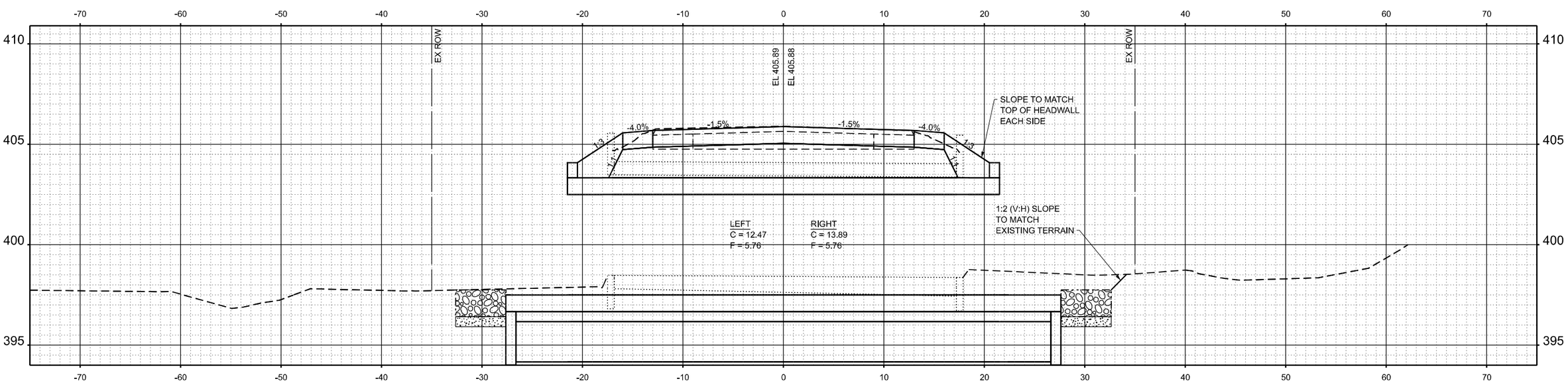

STA 828+72.00

FINAL SURVEY	BY	DATE
SURVEYED		
PLOTTED		
TEMPLATE		
AREAS		
AREAS CHECKED		
NOTE BOOK		
NO.		

ORIGINAL SURVEY	BY	DATE
SURVEYED		
PLOTTED		
TEMPLATE		
AREAS		
AREAS CHECKED		
NOTE BOOK		
NO.		

MODEL: PrCL IL 34 - 828+72.00 [Sheet]
FILE NAME: Y:\IDOT\1423-07_78399\78399 DESIGN\CADD\CAD_Sheets 083-7108\D978399 083-7108-sht-xssht.dgn

ESCA CONSULTANTS, INC.
CIVIL & STRUCTURAL ENGINEERS

USER NAME = atn	DESIGNED - ATN	REVISED -
ESCA PROJECT NO. = 1423.07	DRAWN - ATN	REVISED -
	CHECKED - ELH	REVISED -
PLOT DATE = 2/28/2025	DATE - 01/25	REVISED -

STATE OF ILLINOIS
DEPARTMENT OF TRANSPORTATION

CROSS SECTIONS
PR SN 083-7108

SCALE: AS SHOWN | SHEET 2 OF 3 SHEETS | STA. 828+72.00 TO STA. 828+80.00

F.A.P. RTE.	SECTION	COUNTY	TOTAL SHEETS	SHEET NO.
132/869	1CR-1; 103CR-1; 103CR-2	SALINE	59	35
		CONTRACT NO. 78399		
		ILLINOIS	FED. AID PROJECT	

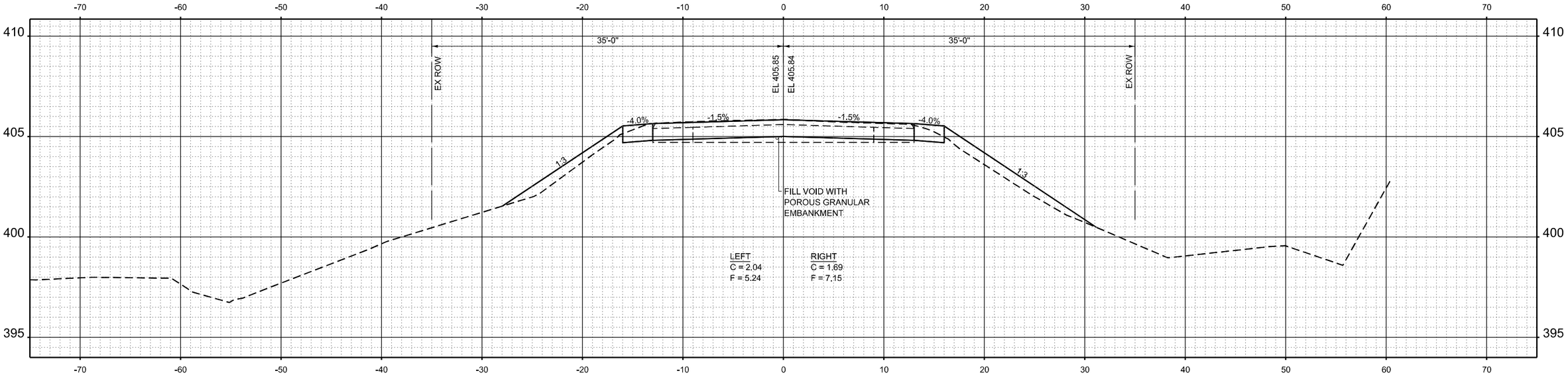

STA 828+92.00

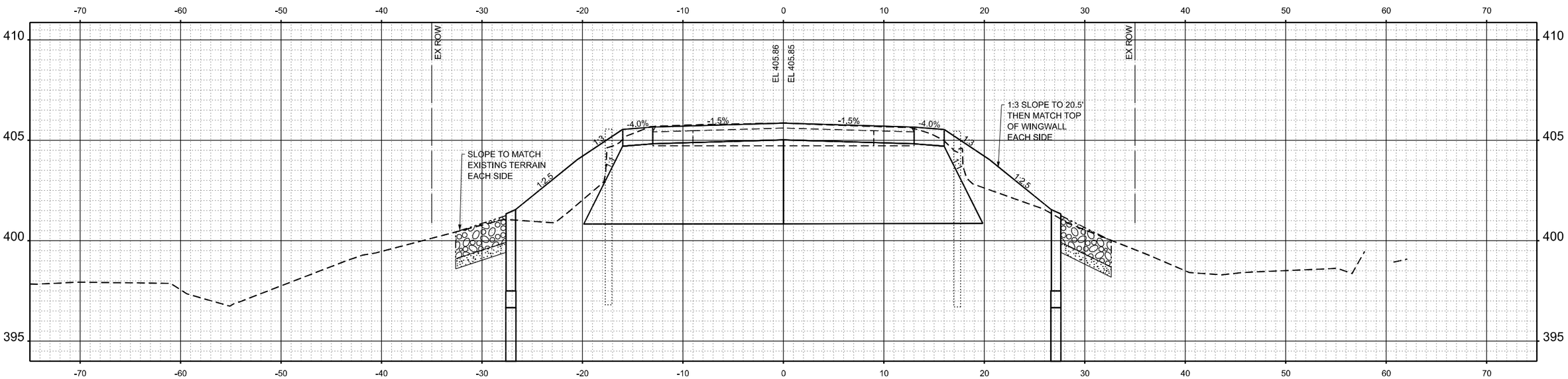

STA 828+88.00

FINAL SURVEY	BY	DATE
SURVEYED		
PLOTTED		
TEMPLATE		
AREAS		
AREAS CHECKED		
NOTE BOOK		
NO.		

ORIGINAL SURVEY	BY	DATE
SURVEYED		
PLOTTED		
TEMPLATE		
AREAS		
AREAS CHECKED		
NOTE BOOK		
NO.		

MODEL: PrCL IL 34 - 828+88.00 [Sheet]
FILE NAME: Y:\IDOT\1423-07_78399\78399 DESIGN\CADD\CAD_Sheets 083-7108\D978399 083-7108-sht-xssht.dgn

ESCA CONSULTANTS, INC.
CIVIL & STRUCTURAL ENGINEERS

USER NAME = atn	DESIGNED - ATN	REVISED -	
ESCA PROJECT NO. = 1423.07	DRAWN - ATN	REVISED -	
	CHECKED - ELH	REVISED -	
PLOT DATE = 2/28/2025	DATE - 02/25	REVISED -	

STATE OF ILLINOIS
DEPARTMENT OF TRANSPORTATION

CROSS SECTIONS
PR SN 083-7108

SCALE: AS SHOWN | SHEET 3 OF 3 SHEETS | STA. 828+88.00 TO STA. 828+92.00

F.A.P. RTE.	SECTION	COUNTY	TOTAL SHEETS	SHEET NO.
132/869	1CR-1; 103CR-1; 103CR-2	SALINE	59	36
		CONTRACT NO. 78399		
		ILLINOIS	FED. AID PROJECT	

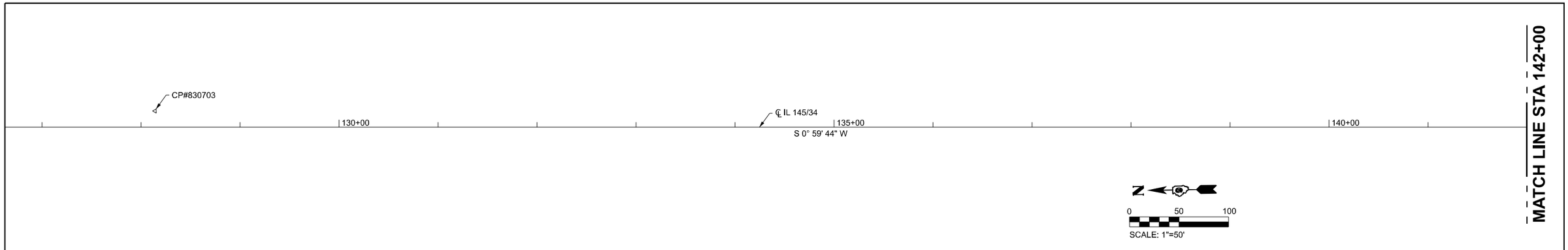

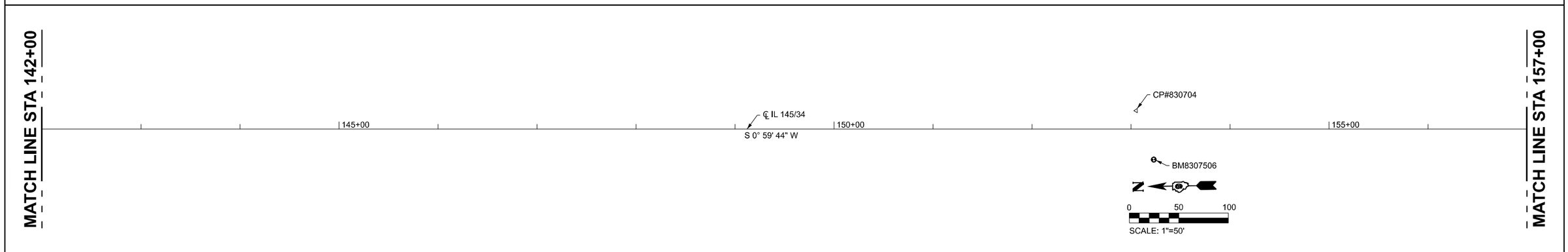

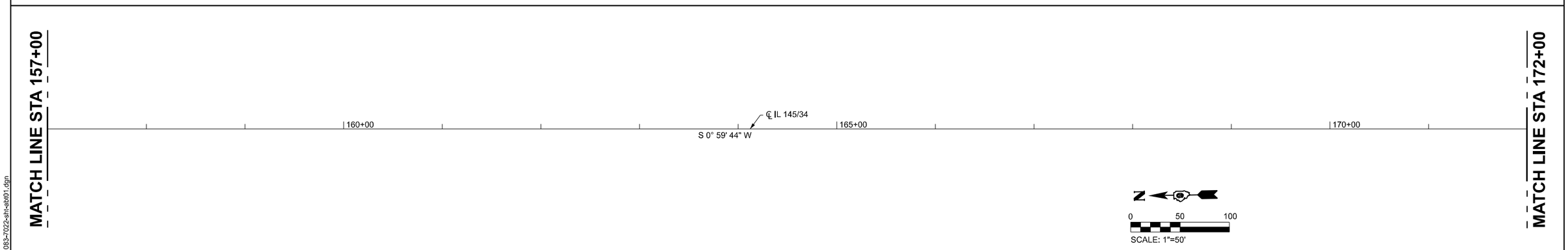

BENCHMARK

NAVD 88

BM8307506 - SAWED SQUARE IN CENTER OF ARC HEADWALL, SN 083-7022
STA 153+23.00, 30.8' RT, EL 385.415

MODEL: PLOT
FILE NAME: Y:\IDOT\1423-07_78399\78399 DESIGN\CADD\CAD_Sheets 083-7022\D978399 083-7022-sht-alb01.dgn

ESCA CONSULTANTS, INC.

USER NAME = atn	DESIGNED -	REVISED -	
ESCA PROJECT NO. = 1423.07	DRAWN - NHC	REVISED -	
	CHECKED - ATN	REVISED -	
PLOT DATE = 2/28/2025	DATE - 02/25	REVISED -	

STATE OF ILLINOIS
DEPARTMENT OF TRANSPORTATION

ALIGNMENT, TIES & BENCHMARKS
EX SN 083-7022

SCALE: 1'=50' | SHEET 1 OF 2 SHEETS | STA. 126+62.50 TO STA. 172+00.00

F.A.P. RTE.	SECTION	COUNTY	TOTAL SHEETS	SHEET NO.
132/869	1CR-1; 103CR-1; 103CR-2	SALINE	59	37
		CONTRACT NO. 78399		
		ILLINOIS	FED. AID PROJECT	

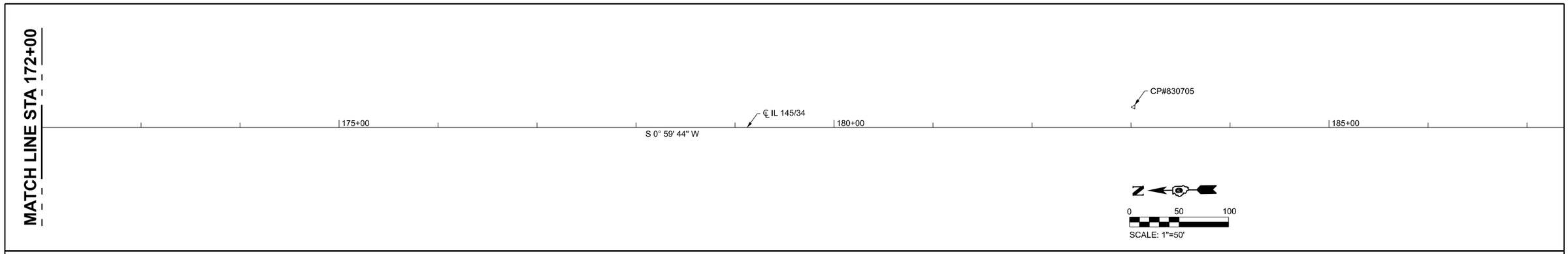

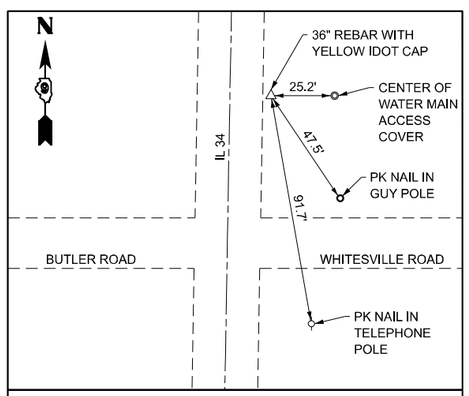

CP#830703

STA 128+14.04, 16.25' LT, ℄ IL 34, EL 370.00
N = 371,727.100 E = 925,536.220

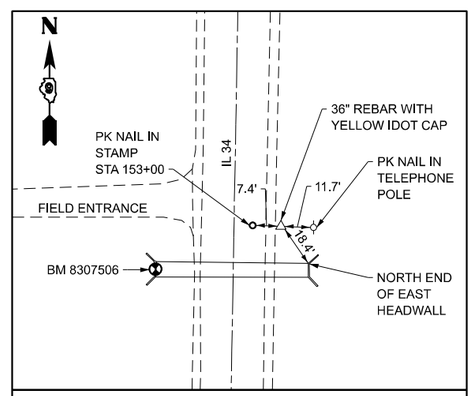

CP#830704

STA 153+05.15, 18.57' LT, ℄ IL 34, EL 385.44
N = 369,236.331 E = 925,495.263

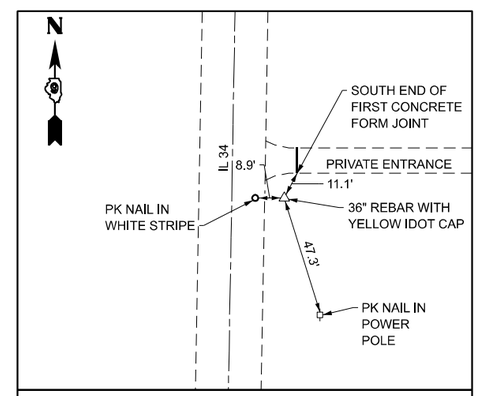

CP#830705

STA 183+02.53, 20.79' LT, ℄ IL 34, EL 414.88
N = 366,239.367 E = 925,445.405

MODEL: PLOT
FILE NAME: Y:\IDOT\1423-07_78399\78399 DESIGN\CADD\CAD_Sheets 083-7022\D978399 083-7022-sht-alt02.dgn

ESCA CONSULTANTS, INC.

USER NAME = atn	DESIGNED -	REVISED -
ESCA PROJECT NO. = 1423.07	DRAWN - NHC	REVISED -
	CHECKED - ATN	REVISED -
PLOT DATE = 3/11/2025	DATE - 03/25	REVISED -

STATE OF ILLINOIS
DEPARTMENT OF TRANSPORTATION

ALIGNMENT, TIES & BENCHMARKS
EX SN 083-7022

SCALE: 1'=50' | SHEET 2 OF 2 SHEETS | STA. 172+00.00 TO STA. 187+37.50

F.A.P. RTE.	SECTION	COUNTY	TOTAL SHEETS	SHEET NO.
132/869	1CR-1; 103CR-1; 103CR-2	SALINE	59	38
		CONTRACT NO. 78399		
		ILLINOIS	FED. AID PROJECT	

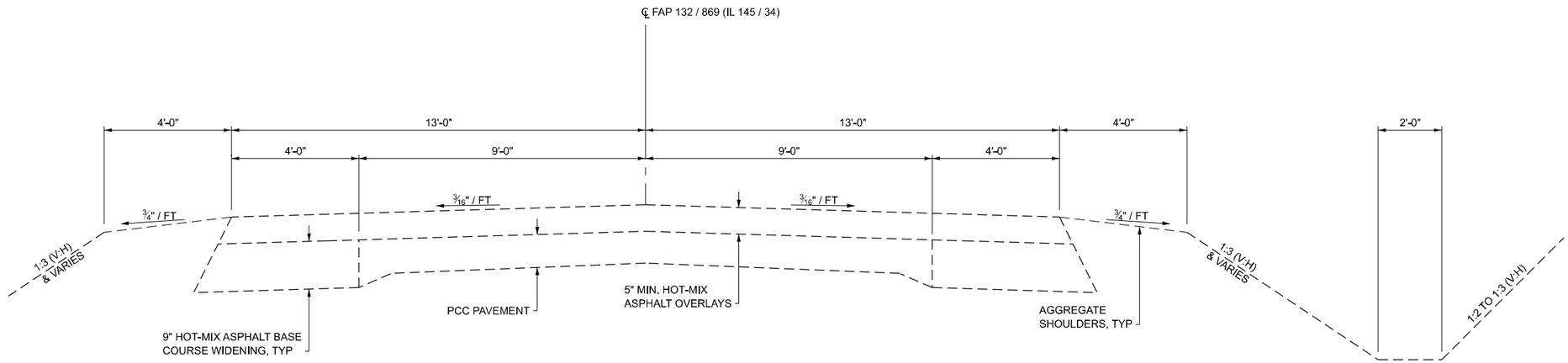

EXISTING TYPICAL SECTION
STA 151+50.00 TO STA 153+19.60
STA 153+25.60 TO STA 154+50.00

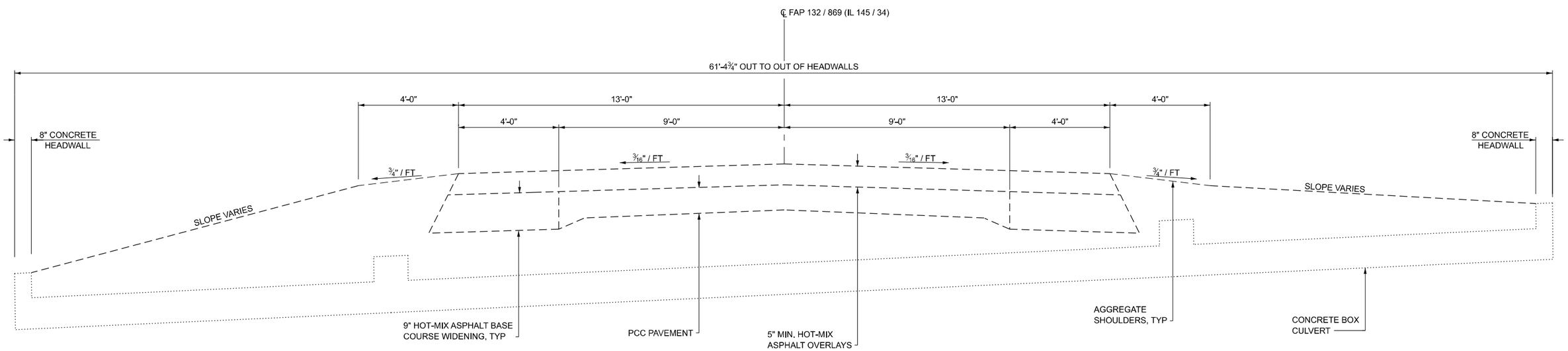

EXISTING TYPICAL SECTION
STA 153+19.60 TO STA 153+25.60

MODEL: Existing Typical Sections Sheet
FILE NAME: Y:\IDOT\1423-07_78399\78399 DESIGN\CADD\CAD_Sheets 083-7022\D978399 083-7022-sht-typical.dgn

ESCA CONSULTANTS, INC.

USER NAME = atn	DESIGNED - ATN	REVISED -	
ESCA PROJECT NO. = 1423.07	DRAWN - ATN	REVISED -	
	CHECKED - ELH	REVISED -	
PLOT DATE = 2/25/2025	DATE - 01/25	REVISED -	

STATE OF ILLINOIS
DEPARTMENT OF TRANSPORTATION

EXISTING TYPICAL SECTIONS
EX SN 083-7022

SCALE: NONE | SHEET 1 OF 1 SHEETS | STA. | TO STA.

F.A.P. RTE.	SECTION	COUNTY	TOTAL SHEETS	SHEET NO.
132/869	1CR-1; 103CR-1; 103CR-2	SALINE	59	39
		CONTRACT NO. 78399		
		ILLINOIS FED. AID PROJECT		

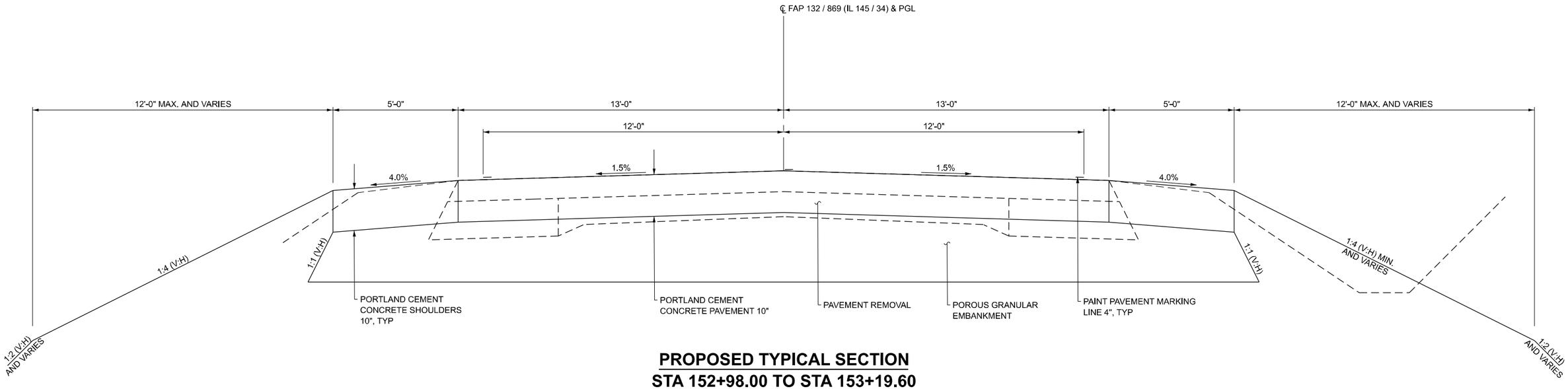

PROPOSED TYPICAL SECTION
STA 152+98.00 TO STA 153+19.60
STA 153+25.60 TO STA 153+48.00

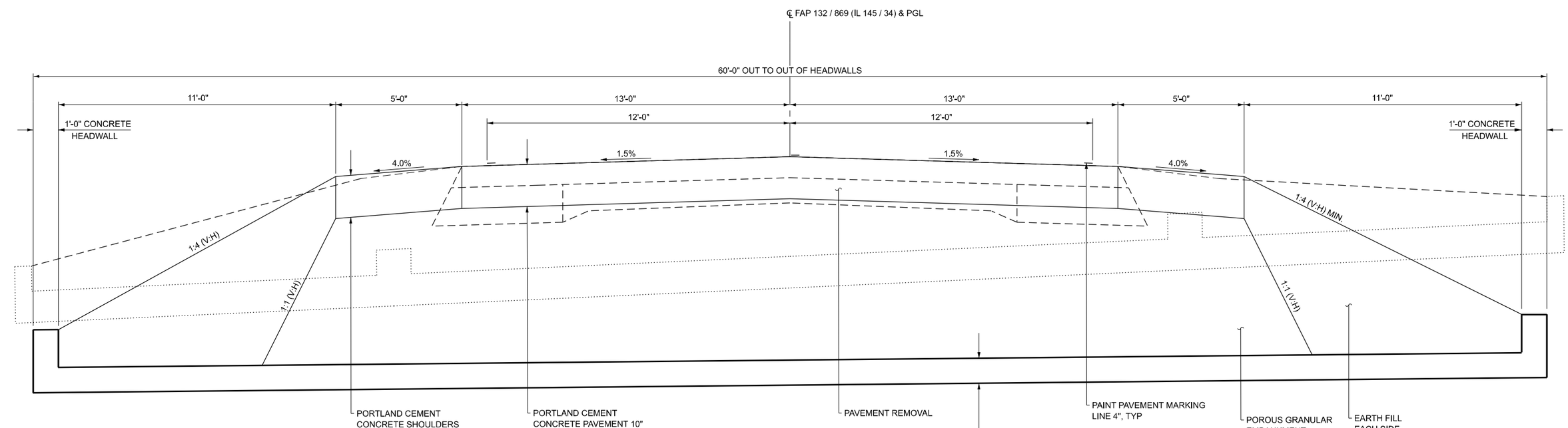

PROPOSED TYPICAL SECTION
STA 153+19.60 TO STA 153+25.60

MODEL: Proposed Typical Sections Sheet
FILE NAME: Y:\IDOT\1423-07_78399\78399 DESIGN\CADD\CAD_Sheets 083-7022\D978399 083-7022-sht-typical.dgn

ESCA CONSULTANTS, INC.
CIVIL & STRUCTURAL ENGINEERS

USER NAME = atn	DESIGNED - ATN	REVISED -	
ESCA PROJECT NO. = 1423.07	DRAWN - ATN	REVISED -	
	CHECKED - ELH	REVISED -	
PLOT DATE = 2/25/2025	DATE - 01/25	REVISED -	

STATE OF ILLINOIS
DEPARTMENT OF TRANSPORTATION

PROPOSED TYPICAL SECTIONS
EX SN 083-7022

SCALE: NONE | SHEET 1 OF 1 SHEETS | STA. | TO STA.

F.A.P. RTE.	SECTION	COUNTY	TOTAL SHEETS	SHEET NO.
132/869	1CR-1; 103CR-1; 103CR-2	SALINE	59	40
		CONTRACT NO. 78399		
		ILLINOIS	FED. AID PROJECT	

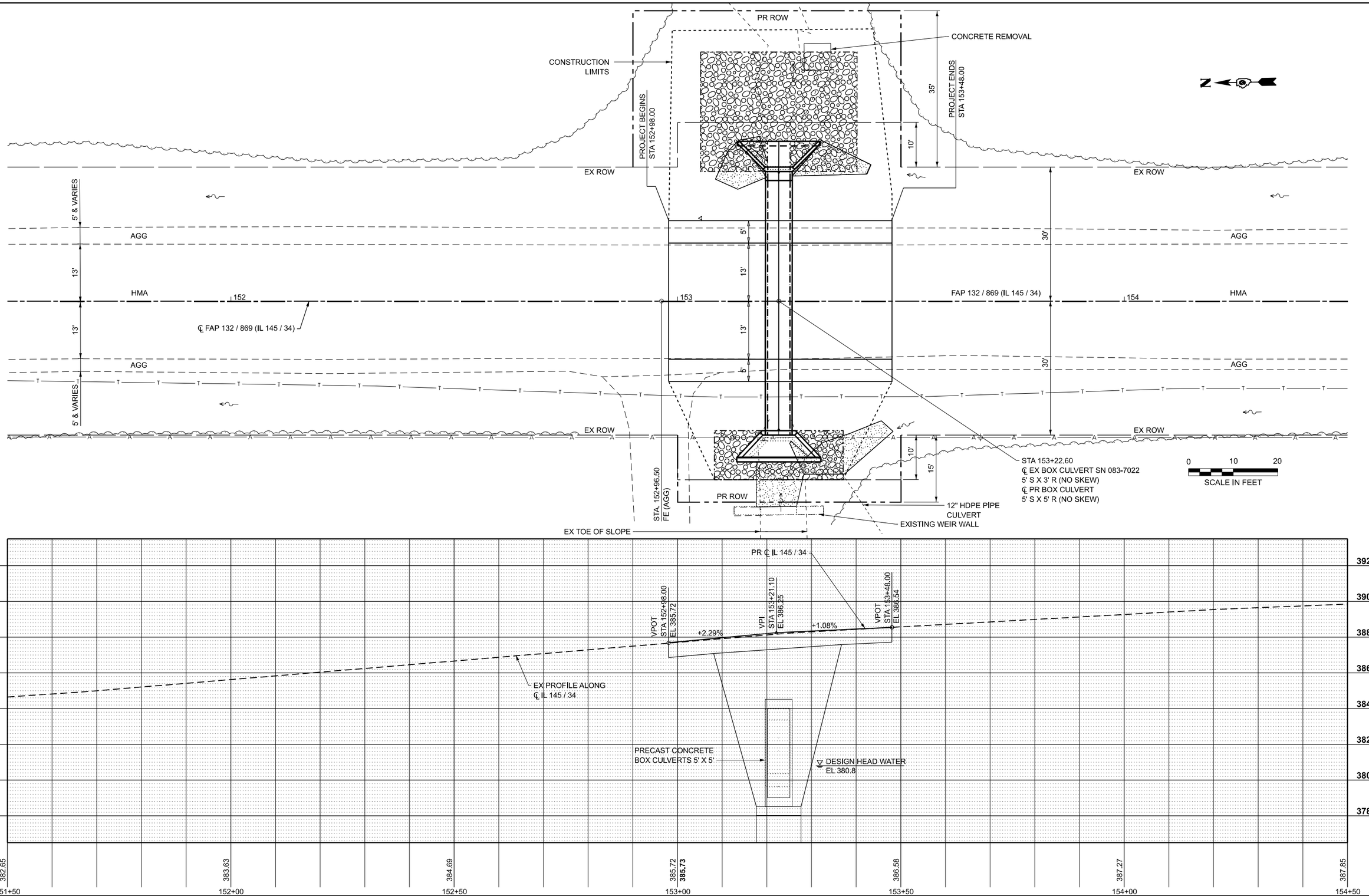

MODEL: PrCL IL 34 - Plan 1 [Sheet]
FILE NAME: Y:\IDOT\1423-07_78399\78399 DESIGN\CADD\CAD_Sheets 083-7022\D978399 083-7022-sht-plnprf.dgn

ESCA CONSULTANTS, INC.

USER NAME = atn	DESIGNED - ATN	REVISED -	
ESCA PROJECT NO. = 1423.07	DRAWN - ATN	REVISED -	
	CHECKED - ELH	REVISED -	
PLOT DATE = 2/28/2025	DATE - 02/25	REVISED -	

STATE OF ILLINOIS
DEPARTMENT OF TRANSPORTATION

PLAN AND PROFILE
EX SN 083-7022

SCALE: AS SHOWN | SHEET 1 OF 1 SHEETS | STA. 151+50.00 TO STA. 154+50.00

F.A.P. RTE.	SECTION	COUNTY	TOTAL SHEETS	SHEET NO.
132/869	1CR-1; 103CR-1; 103CR-2	SALINE	59	41

CONTRACT NO. 78399

ILLINOIS | FED. AID PROJECT

LEGEND

- EROSION CONTROL BLANKET
- PERIMETER EROSION BARRIER
- CONSTRUCTION LIMITS

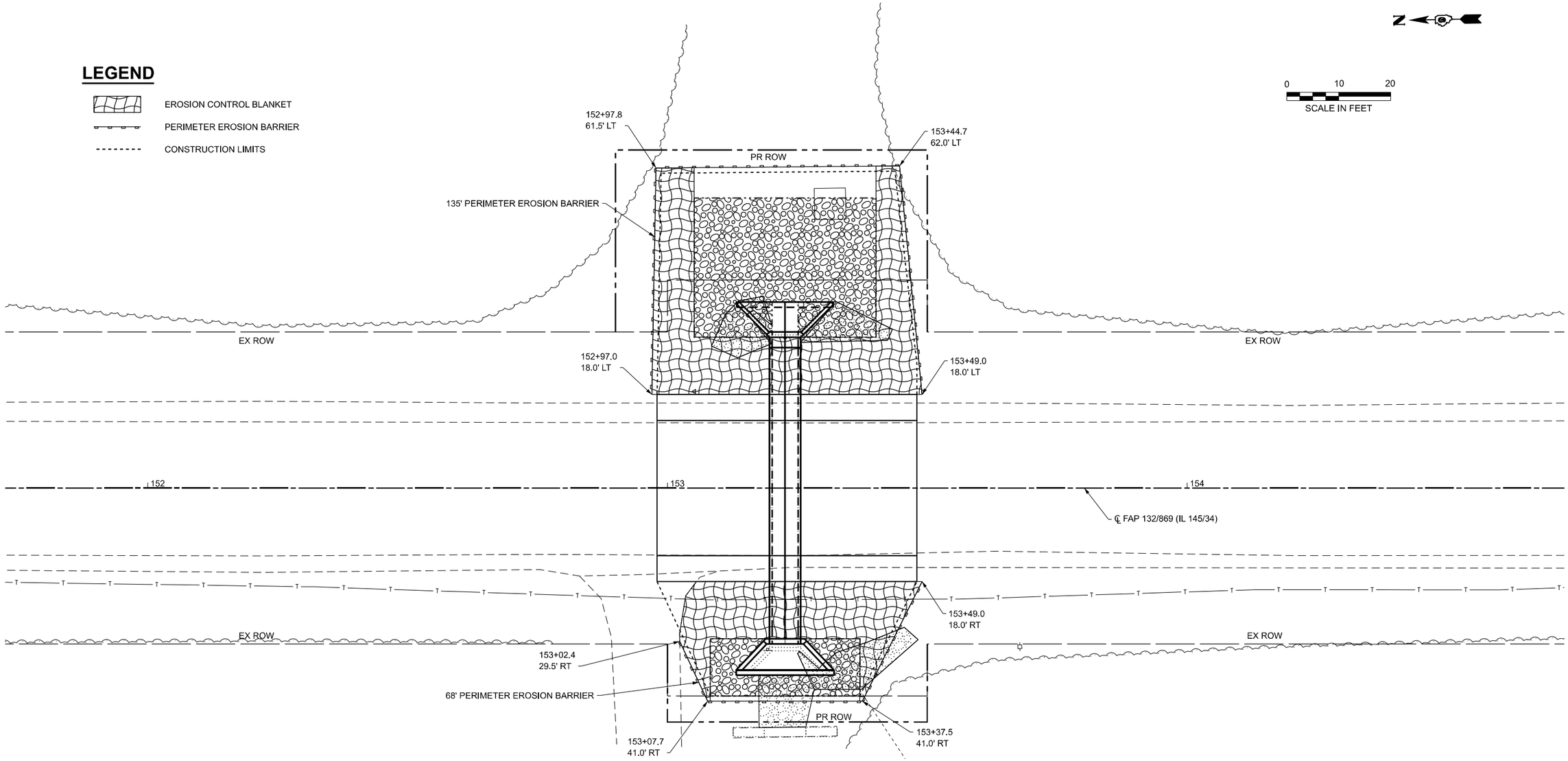

MODEL: PrCL IL 34 - Erosion Control Plan [Sheet]
FILE NAME: Y:\IDOT\1423-07_78399\78399 DESIGN\CADD\CAD_Sheets 083-7022\D978399 083-7022-sht-eros.dgn

ESCA CONSULTANTS, INC.	USER NAME = atn	DESIGNED - ATN	REVISED -	STATE OF ILLINOIS DEPARTMENT OF TRANSPORTATION	EROSION CONTROL PLAN EX SN 083-7022	F.A.P. RTE.	SECTION	COUNTY	TOTAL SHEETS / SHEET NO.
	ESCA PROJECT NO. = 1423.07	DRAWN - ATN	REVISED -			132/869	1CR-1; 103CR-1; 103CR-2	SALINE	59 / 42
		CHECKED - ELH	REVISED -					CONTRACT NO. 78399	
	PLOT DATE = 2/25/2025	DATE - 02/25	REVISED -		SCALE: AS SHOWN / SHEET 1 OF 1 SHEETS / STA. 151+72.60 TO STA. 154+72.60		ILLINOIS	FED. AID PROJECT	

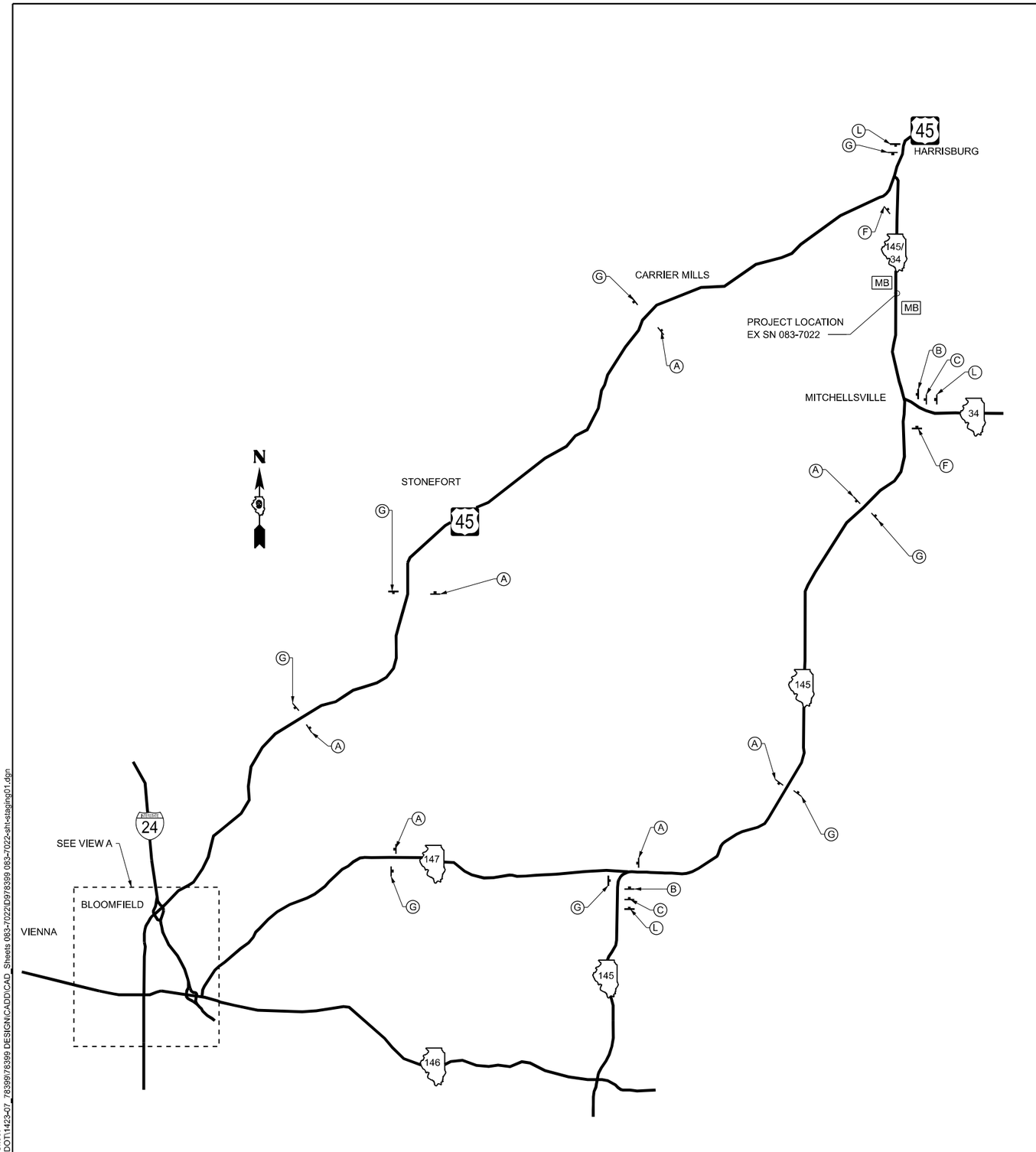

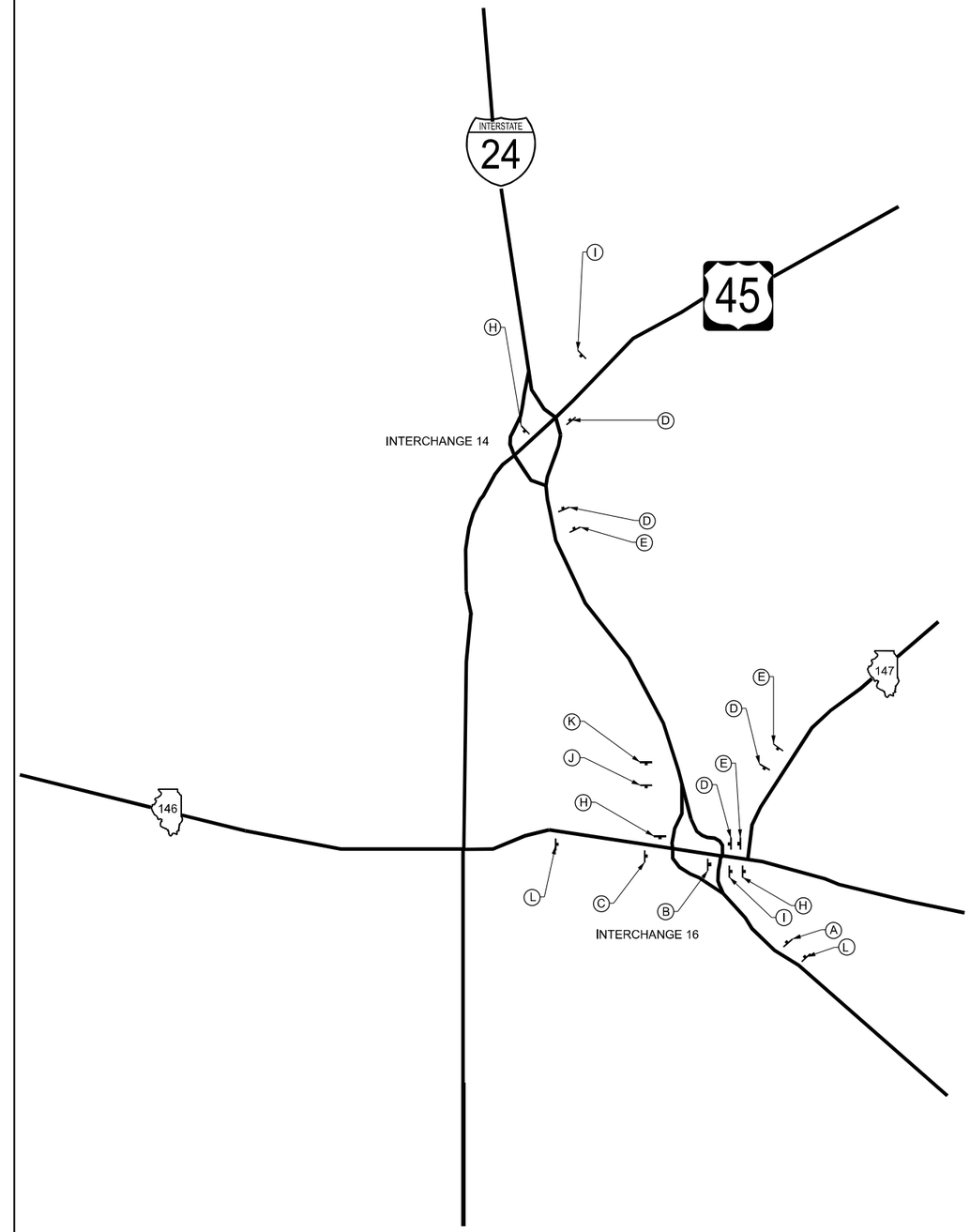

VIEW A

MODEL: Detour Sheet
FILE NAME: Y:\IDOT\1423-07_78399\78399 DESIGN\CADD\CAD_Sheets 083-7022\D978399 083-7022-sh1-staging01.dgn

ESCA CONSULTANTS, INC.
CIVIL & STRUCTURAL ENGINEERS

USER NAME = atn	DESIGNED - ATN	REVISED -	
ESCA PROJECT NO. = 1423.07	DRAWN - ATN	REVISED -	
	CHECKED - ELH	REVISED -	
PLOT DATE = 2/25/2025	DATE - 01/25	REVISED -	

STATE OF ILLINOIS
DEPARTMENT OF TRANSPORTATION

DETOUR SIGNING
EX SN 083-7022

SCALE: NONE | SHEET 1 OF 2 SHEETS | STA. | TO STA.

F.A.P. RTE.	SECTION	COUNTY	TOTAL SHEETS	SHEET NO.
132/869	1CR-1; 103CR-1; 103CR-2	SALINE	59	43
		CONTRACT NO. 78399		
		ILLINOIS	FED. AID PROJECT	

NOTES:

1. THE CONTRACTOR HAS THE OPTION OF USING METAL POSTS INSTEAD OF WOOD.
2. THE SIGNS SHALL BE BLACK ON ORANGE. THE POSTS SHALL BE PLAED 12 FEET FROM THE EDGE OF PAVEMENT AS DIRECTED BY THE ENGINEER.
3. ALL SIGNS AND HARDWARE REQUIRED TO INSTALL THE DETOUR ROUTE SIGNING SHALL BE INCLUDED IN COST OF DETOUR SIGNING.
4. SIGNS SHALL BE REMOVED ON COMPLETION OF THE CONTRACT AT THE DIRECTION OF THE ENGINEER. THIS WORK SHALL BE COMPLETED ACCORDING TO SECTION 724. THIS WORK WILL NOT BE PAID FOR. THE SIGNS AND POSTS SHALL BECOME PROPERTY OF THE CONTRACTOR.
5. THE RELOCATING, MAINTENANCE OR REPLACEMENT OF SIGNS SHALL BE INCLUDED IN COST OF DETOUR SIGNING.
6. EXACT SIGN PLACEMENT WILL BE DETERMINED BY THE ENGINEER.
7. ALL EXISTING SIGNING THAT IS NOT APPLICABLE WHILE THE ROAD CLOSURE IS IN EFFECT SHALL BE COMPLETELY COVERED BY THE CONTRACTOR.
8. THE DISTRICT 9 OPERATIONS ENGINEER SHALL BE CONTACTED 10 DAYS PRIOR TO ERECTION OF THE SIGNS.
9. TYPE III BARRICADES WITH ROAD CLOSED SIGNS AS SHOWN ON HIGHWAY STANDARD 701901 SHALL BE ERECTED AT EACH END OF THE WORK SITE DURING ROAD CLOSURE.

PRIOR TO CLOSURE

MB - CHANGEABLE MESSAGE BOARD - 2 REQUIRED
(NOTIFICATION - 2 WEEKS PRIOR TO START OF WORK AND DURING THE DURATION OF THE CLOSURE)

PRIOR TO CLOSURE	DURING CLOSURE
ILLINOIS 34 WILL BE CLOSED	ILLINOIS 34 CLOSED
XX MILES AHEAD	XX MILES AHEAD
DATE TO DATE	LOCAL TRAFFIC ONLY

SUGGESTED MESSAGE
(EXACT MESSAGE SHALL BE DETERMINED BY THE ENGINEER)

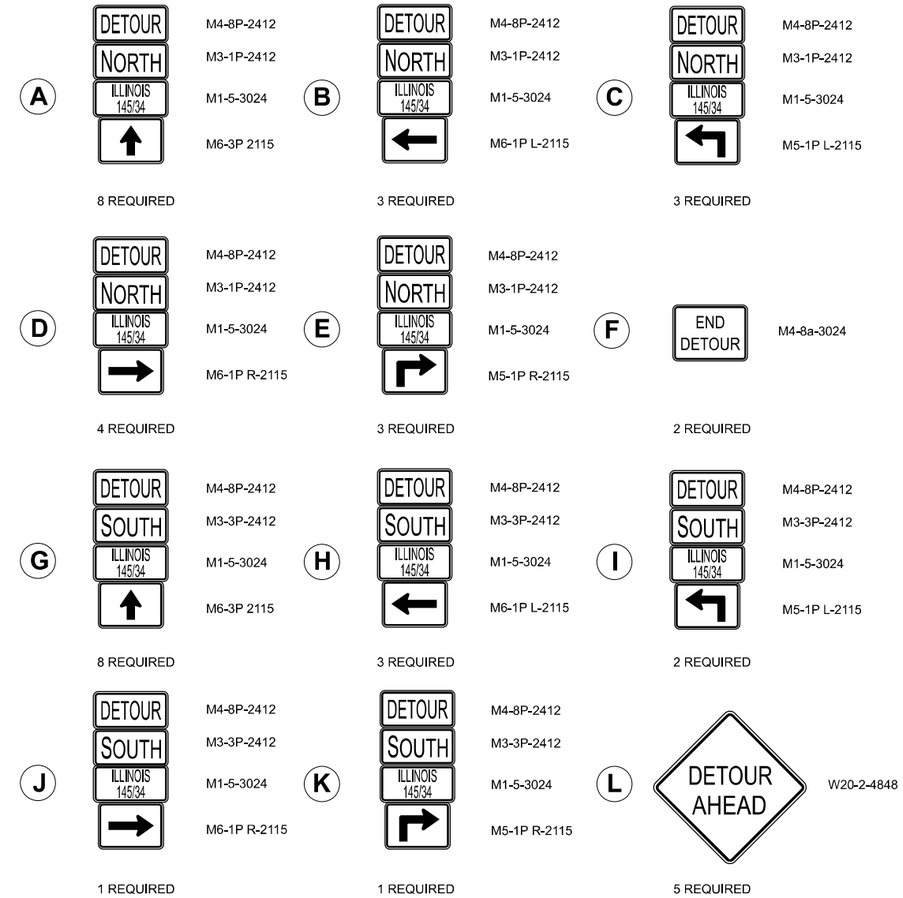

MODEL: Signs and Notes Sheet
FILE NAME: Y:\IDOT\1423-07_78399\78399 DESIGN\CADD\CAD_Sheets 083-7022\D978399 083-7022-sht-staging01.dgn

ESCA CONSULTANTS, INC.

USER NAME = atn	DESIGNED - ATN	REVISED -	
ESCA PROJECT NO. = 1423.07	DRAWN - ATN	REVISED -	
	CHECKED - ELH	REVISED -	
PLOT DATE = 3/3/2025	DATE - 03/25	REVISED -	

STATE OF ILLINOIS
DEPARTMENT OF TRANSPORTATION

DETOUR SIGNING
EX SN 083-7022

SCALE: NONE | SHEET 2 OF 2 SHEETS | STA. | TO STA.

F.A.P. RTE.	SECTION	COUNTY	TOTAL SHEETS	SHEET NO.
132/869	1CR-1; 103CR-1; 103CR-2	SALINE	59	44
		CONTRACT NO. 78399		
		ILLINOIS FED. AID PROJECT		

LEGEND

- DRUM WITH STEADY BURN BI-DIRECTIONAL LIGHT
- TRAFFIC SIGNAL
- INDUCTION LOOP DETECTOR

0 20 40
SCALE IN FEET

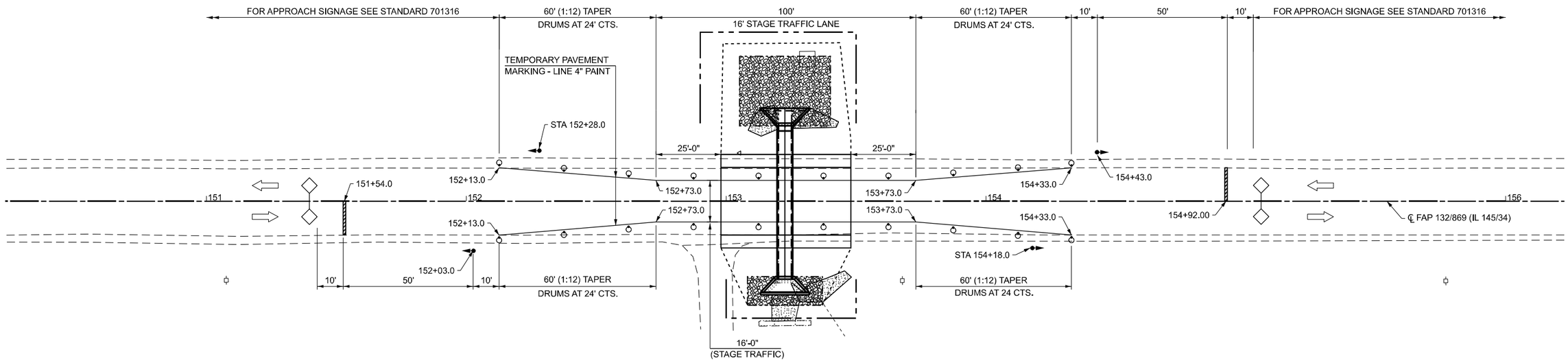

STAGE CONSTRUCTION

GENERAL NOTES

1. TRAFFIC CONTROL SHALL BE ERECTED AS SHOWN ACCORDING TO TRAFFIC CONTROL & PROTECTION, STANDARD 701316.
2. SEE SPECIAL PROVISIONS FOR ADDITIONAL TRAFFIC CONTROL REQUIREMENTS.
3. COORDINATE LOCATION OF SIGNALS WITH FINAL WORK AS DIRECTED BY THE ENGINEER.
4. ADDITIONAL SIGNAGE FOR ADVANCE WIDTH RESTRICTION WARNING SHALL BE INCLUDED IN THE COST OF STANDARD 701316.
5. SEE STANDARD 701316 FOR COMPLETION OF STAGE CONSTRUCTION SIGNING AND ADVANCE DETECTOR LOOP PLACEMENT NOT SHOWN.
6. THE ADVANCE DETECTOR LOOPS ARE TYPICALLY LOCATED 275 FEET IN ADVANCE OF THE STOP BAR. THE BUREAU OF OPERATIONS SHOULD APPROVE THE LOOP LOCATIONS PRIOR TO INSTALLATION.
7. THE CENTERLINE PAVEMENT MARKING SHOULD BE REMOVED FROM STOP BAR TO STOP BAR.
8. ANY TIME THE DRUMS WITH STEADY BURNING LIGHTS ARE NOT IN THE PROPER POSITION, FLAGGERS SHALL BE IN PLACE TO CONTROL TRAFFIC AND THE TEMPORARY TRAFFIC SIGNALS BE TURNED OFF OR COVERED.
9. ALL TRAFFIC SIGNALS SHOWN ARE INCLUDED IN TEMPORARY BRIDGE TRAFFIC SIGNALS - 1 EACH.
10. THE COST OF THE TEMPORARY PAVEMENT MARKING AND ITS REMOVAL IS INCLUDED IN THE COST OF STANDARD 701316.
11. THE CONTRACTOR SHALL COORDINATE ACCESS TO THE FIELD ENTRANCE WITH THE PROPERTY OWNER.
12. THE DIMENSION SHOWN ON THE WIDTH RESTRICTION SIGN (W12-I102(0)-48) SHOWN ON STANDARD 701316 AND ON THE ADVANCE WARNING SIGN (W12-I103) SHOWN ON THIS SHEET SHALL BE 14'-6" FOR STAGE CONSTRUCTION.

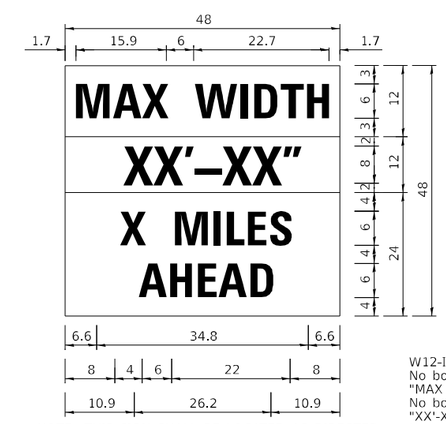

NOTE: THIS SIGN SHALL BE LOCATED AS DIRECTED BY THE ENGINEER. ONE SIGN SHALL BE PROVIDED FOR EACH APPROACH TO THE SITE.

W12–I103

W12-I103 (Width is 8D);
No border, Black on White;
"MAX WIDTH" D;
No border, Black on Orange;
"XX'-XX"" D;
No border, Black on White;
"X MILES" D; "AHEAD" D

MODEL: PrCL IL 34 - Stage Construction Plan Sheet
FILE NAME: Y:\IDOT\1423-07_78399\78399 DESIGN\CADD\CAD_Sheets 083-7022\D978399 083-7022-sh-staging02.dgn

ESCA CONSULTANTS, INC.

USER NAME = atn	DESIGNED - ATN	REVISED -	
ESCA PROJECT NO. = 1423.07	DRAWN - ATN	REVISED -	
	CHECKED - ELH	REVISED -	
PLOT DATE = 2/28/2025	DATE - 02/25	REVISED -	

STATE OF ILLINOIS
DEPARTMENT OF TRANSPORTATION

STAGE CONSTRUCTION
EX SN 083-7022

SCALE: AS SHOWN | SHEET 1 OF 2 SHEETS | STA. 150+22.60 TO STA. 156+22.60

F.A.P. RTE.	SECTION	COUNTY	TOTAL SHEETS	SHEET NO.
132/869	1CR-1; 103CR-1; 103CR-2	SALINE	59	45
		CONTRACT NO. 78399		
		ILLINOIS	FED. AID PROJECT	

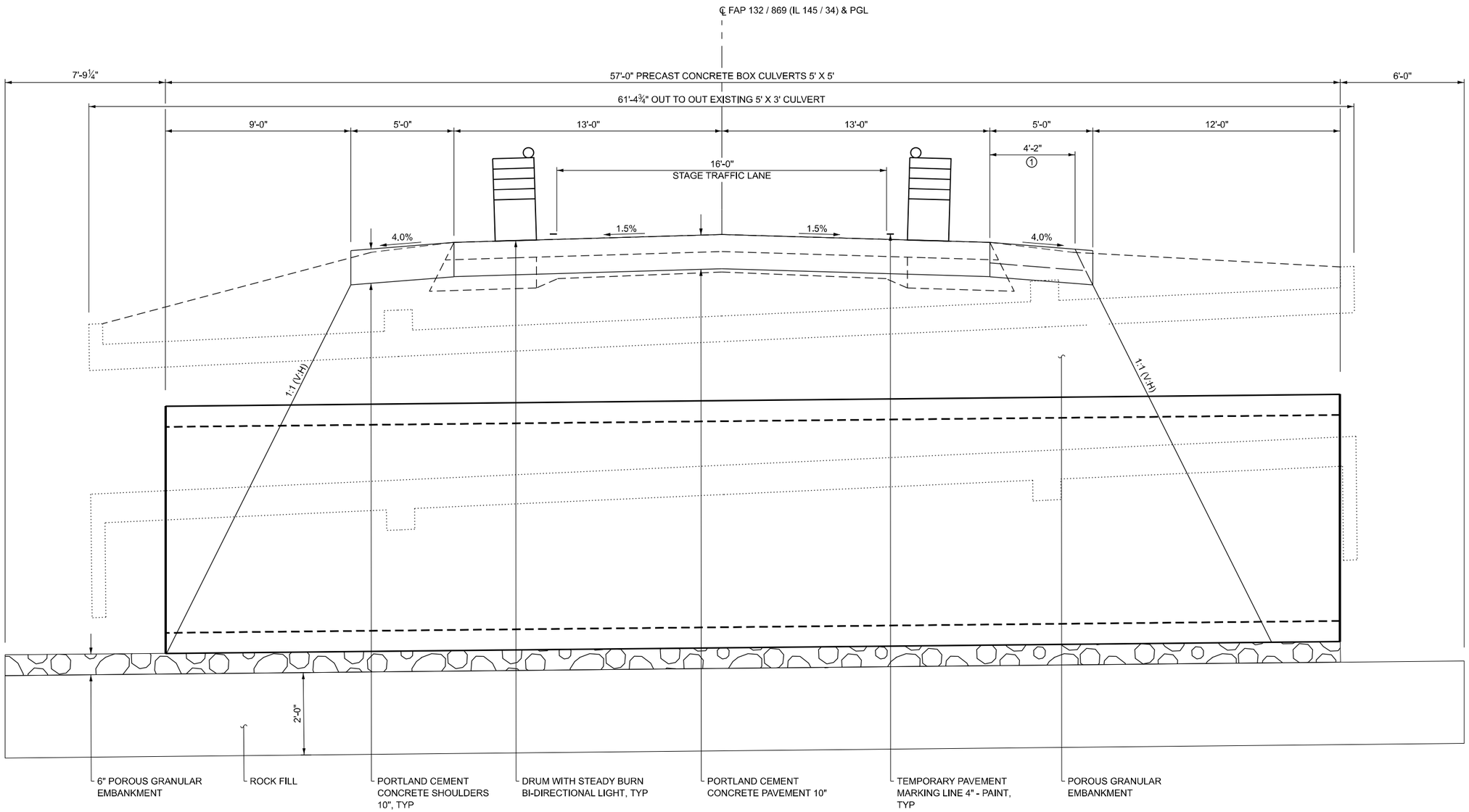

TEMPORARY SECTION DURING CONSTRUCTION OF CAST-IN-PLACE DROP STRUCTURE

(LOOKING SOUTH)

① TEMPORARY AGGREGATE SHOULDERS, TYPE B 6" MAY BE CONSTRUCTED ON EACH SIDE IN LIEU OF THE PCC SHOULDERS PRIOR TO OPENING THE ROADWAY TO STAGE TRAFFIC, COST INCLUDED IN POROUS GRANULAR EMBANKMENT

MODEL: Stage Construction Typical Sections Sheet
FILE NAME: Y:\IDOT\1423-07_78399\78399 DESIGN\CADD\CAD_Sheets 083-7022\D978399 083-7022-sht-staging02.dgn

ESCA CONSULTANTS, INC.

USER NAME = atn	DESIGNED - ATN	REVISED -	STATE OF ILLINOIS DEPARTMENT OF TRANSPORTATION
ESCA PROJECT NO. = 1423.07	DRAWN - ATN	REVISED -	
	CHECKED - ELH	REVISED -	
PLOT DATE = 2/28/2025	DATE - 01/25	REVISED -	

STAGE CONSTRUCTION
EX SN 083-7022

SCALE: NONE | SHEET 2 OF 2 SHEETS | STA. | TO STA.

F.A.P. RTE.	SECTION	COUNTY	TOTAL SHEETS	SHEET NO.
132/869	1CR-1; 103CR-1; 103CR-2	SALINE	59	46
		CONTRACT NO. 78399		
		ILLINOIS FED. AID PROJECT		

PARCEL#	TAX ID#	PURPOSE	ACREAGE
91223006	07-1-015-02; 07-1-017-03	R.O.W.	0.043 ACRES±

JH1	N: 369084.099' E: 925403.850'
JH2	N: 369082.611' E: 925382.563'
JH3	N: 369090.023' E: 925388.711'
JH4	N: 369083.414' E: 925378.030'
JH5	N: 369043.472' E: 925402.287'
JH6	N: 369045.115' E: 925413.811'
JH7	N: 369054.530' E: 925405.858'
JH8	N: 369053.084' E: 925441.078'

ALIGNMENT INFO
FAP 132 (IL 34/145)

POINT#	STATION	NORTHING	EASTING
STAEQU2	117+94.83	372,746.44	925,537.70
P.C.5	201+44.41	364,398.12	925,392.61

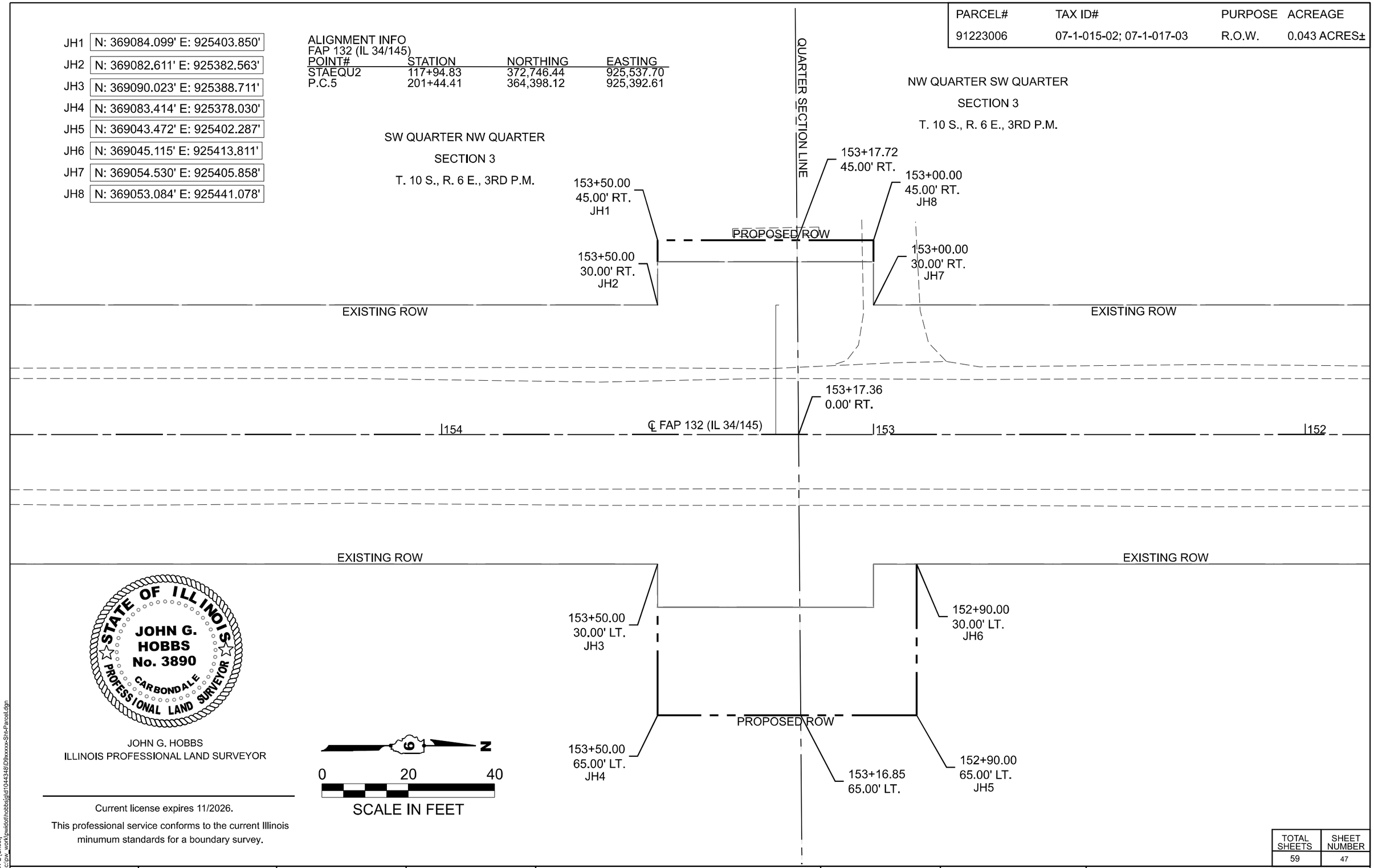

STATE OF ILLINOIS
JOHN G. HOBBS
No. 3890
CARBONDALE
PROFESSIONAL LAND SURVEYOR

JOHN G. HOBBS
ILLINOIS PROFESSIONAL LAND SURVEYOR

Current license expires 11/2026.

This professional service conforms to the current Illinois minumum standards for a boundary survey.

N

0 20 40
SCALE IN FEET

TOTAL SHEETS	SHEET NUMBER
59	47

MODEL: ROW-2 [Sheet]
FILE NAME: c:\pw_work\pwidot\hobbsjgld\d1044348\D9xxxxx-Sht-Parcel.dgn

USER NAME = john.hobbs	DESIGNED -	REVISED -
	DRAWN -	REVISED -
	CHECKED -	REVISED -
PLOT DATE = 2/21/2025	DATE -	REVISED -

ILLINOIS DEPARTMENT OF TRANSPORTATION
RIGHT-OF-WAY PLAT

ROUTE FAP 132 (IL34/145)	SECTION 1BR-4	COUNTY SALINE	JOB# R-99-012-23
SEC 3	T 10 S, R 6 E OF 3RD P.M.	DATE: 02/19/2025	DRAWN BY: JOHN G. HOBBS
SCALE: 1" = 20'	SHEET NO. 1 OF 2 SHEETS	STA 152+00.00 TO STA 155+00.00	CONTRACT NO. 78399

Benchmark: BM 8307506 – sawed square in center of arc headwall, SN 083-7022, sta. 153+23, 30.8' rt., elev. 385.415 (NAVD 88).

Existing Structure: The original construction date of SN 083-7022 is unknown. There are no original plans available. The culvert was widened in 1979 as SBI Route 34, Section 1(W,RS-1),1B-1-DR. It is a single-barrel, 5' span by 3' rise, cast-in-place concrete culvert that is 61'-4¾" long. The culvert is not skewed. A short-term road closure will be used to construct the barrel, and traffic will use a temporary detour route. Temporary traffic signals will be used to maintain one lane of traffic to complete the cast-in-place concrete drop structure.

No Salvage.

INDEX OF SHEETS

STATE OF ILLINOIS
ERIC L. HENKLE
No. 081-006159
LICENSED STRUCTURAL ENGINEER
EXPIRES 11-30-2026
SIGNATURE
03-03-25
DATE

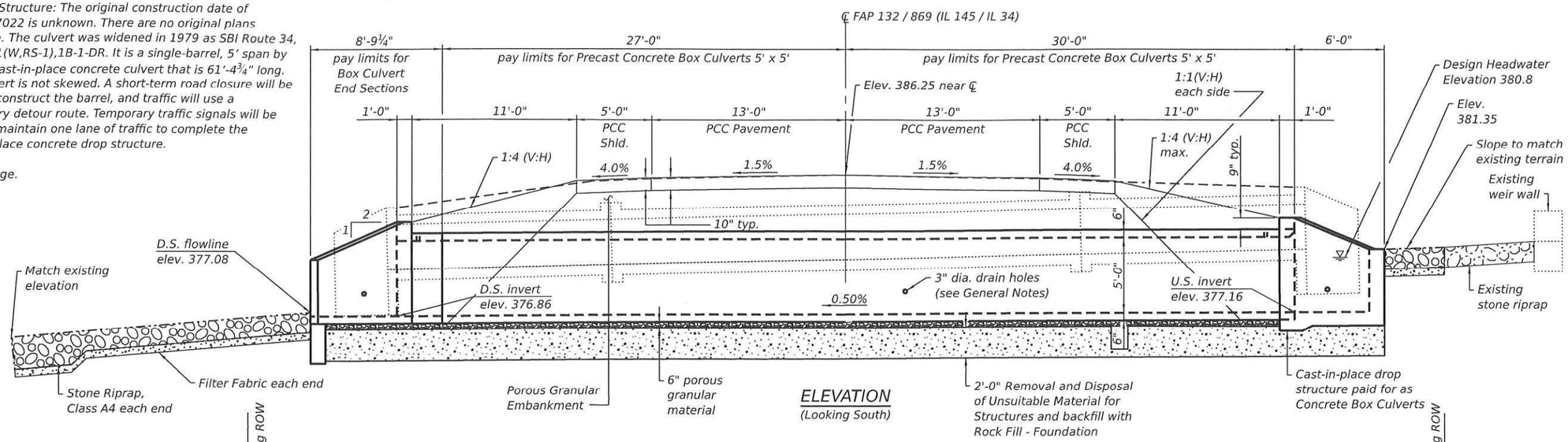

ELEVATION
(Looking South)

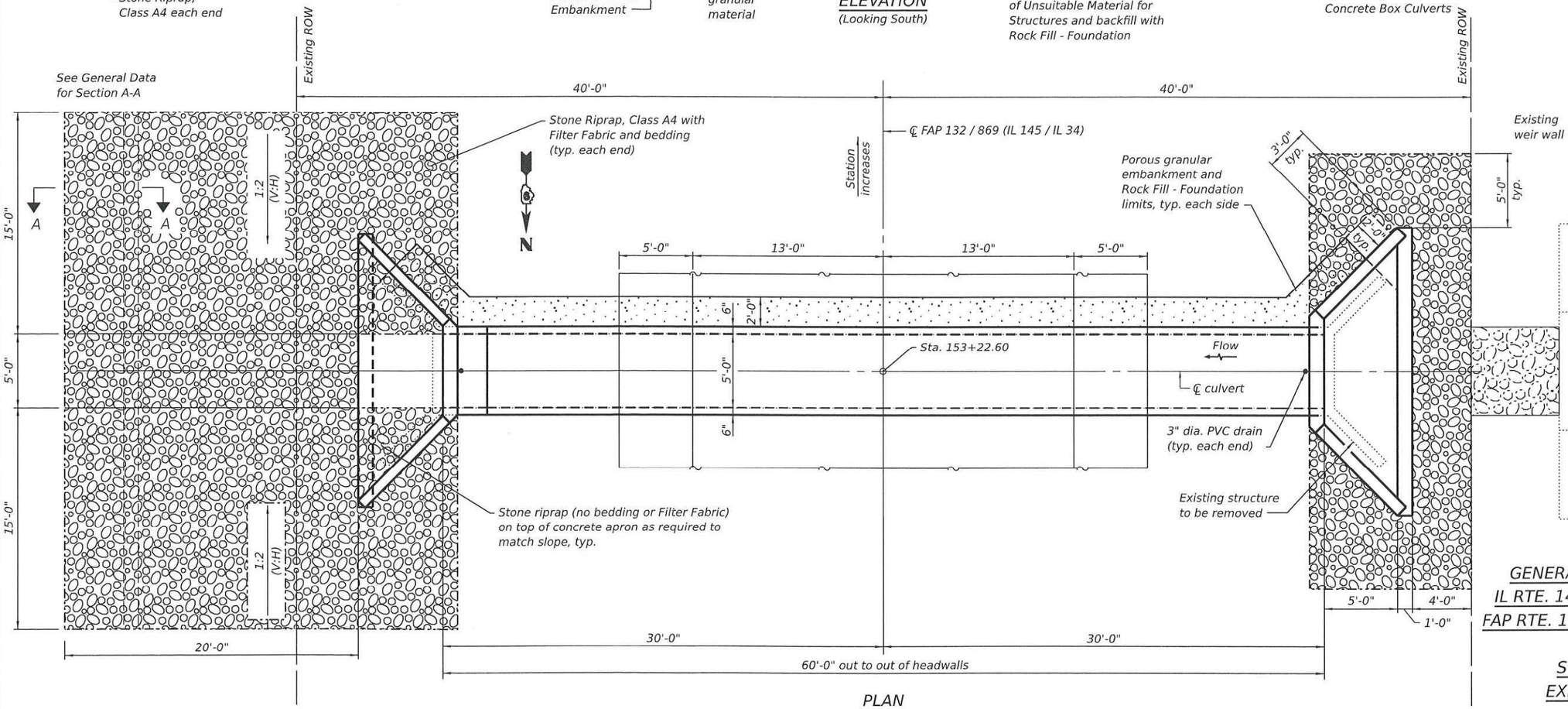

PLAN

DESIGN SPECIFICATIONS

2020 AASHTO LRFD Bridge Design Specifications, 9th Edition

LOADING HL-93

DESIGN STRESSES

PRECAST UNITS

f'c = 5,000 psi
fy = 65,000 psi (welded wire reinforcement)

FIELD UNITS

f'c = 3,500 psi
fy = 60,000 psi (reinforcement bars)

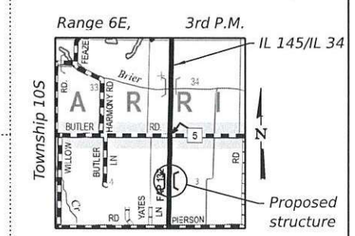

LOCATION SKETCH

GENERAL PLAN AND ELEVATION
IL RTE. 145/IL RTE. 34 OVER CREEK
FAP RTE. 132/FAP RTE. 869 SEC. 1CR-1
SALINE COUNTY
STATION 153+22.60
EXISTING SN 083-7022

ESCA CONSULTANTS, INC.

USER NAME = nhc	DESIGNED - ELH 12/24	REVISED -	STATE OF ILLINOIS DEPARTMENT OF TRANSPORTATION	
ESCA PROJECT NO.= 1423.07	CHECKED - ARD 12/24	REVISED -		
PLOT SCALE = 0:2 ':" / in.	DRAWN - NHC 03/25	REVISED -		
PLOT DATE = 3/3/2025	CHECKED - ELH 03/25	REVISED -		

SHEET 1 OF 6 SHEETS

F.A.P. RTE.	SECTION	COUNTY	TOTAL SHEETS	SHEET NO.
132/869	1CR-1;103CR-1;103CR-2	SALINE	59	48

CONTRACT NO. 78399
ILLINOIS FED. AID PROJECT

MODEL: Proposed Structure Sheet
FILE NAME: Y:\IDOT\1423-07_78399\78399 DESIGN\CADD\SP SN 083-7022\0837022-78399-01-GenPlan.dgn
3/3/2025 11:20:20 AM

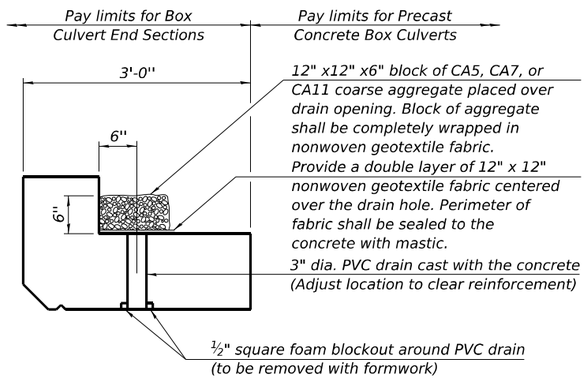

DRAIN DETAIL

Drain at end section is shown, drain at drop structure is similar (All costs associated with furnishing and constructing the above drain detail will not be measured for payment but shall be included in the contract unit price for the associated work.)

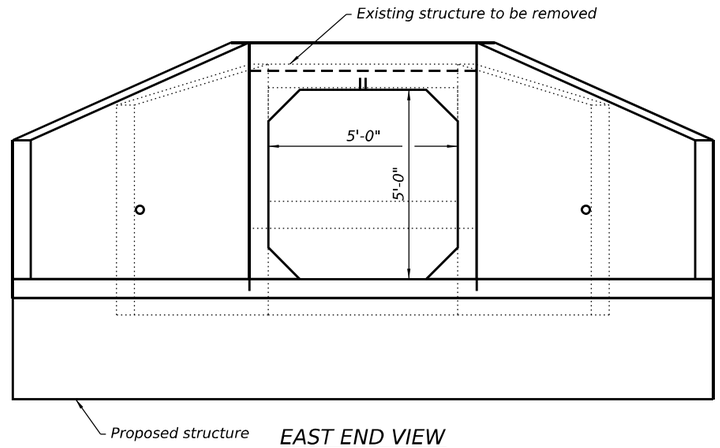

EAST END VIEW

GENERAL NOTES

The design fill height for this box is 3.8 ft. maximum and 3.2 ft. minimum. The precast box culvert sections shall conform to the requirements of ASTM C 1577.

Drain holes shall be provided on exterior culvert walls for each precast box segment with a clear rise greater than 3 ft. The drain hole shall be located within the lower ⅓ of the clear rise of the box culvert, shall not intercept the haunch, and shall conform to the requirements of Article 503.11 of the Standard Specifications.

Nonwoven geotextile fabric shall conform to the requirements of Art. 1080.01 of the Standard Specifications. The minimum weight of the fabric shall be 6 ounces per square yard.

Precast concrete box culverts and box culvert end sections shall be backfilled with Porous Granular Embankment in the required excavation areas on the sides of the box culvert from the bottom of the proposed pavement to the bottom of the box culvert. This area of PGE is included in the Porous Granular Embankment pay item. The 6-inch thick layer of porous granular material required under the precast concrete box culvert, according to Section 540.06 of the Standard Specifications, shall also apply to the end section. Cost of this porous granular material will not be paid for separately but shall be included in the unit price of the work for which it is required.

Reinforcement bars designated (E) shall be epoxy coated.

Layout of the slope protection system may be varied to suit ground conditions in the field as directed by the Engineer.

The Contractor shall halt the excavation at the bottom of the 6" porous granular material under the culvert and request a soils test from IDOT District 9. The District Geotechnical Engineer will evaluate the need for additional excavation and determine the limits of Rock Fill.

The Porous Granular Embankment shall be CA-7 or CA-11 and capped with 1'-0" minimum thickness CA-6 or CA-10 directly underneath the proposed concrete pavement. The outer 3'-0" of the culvert shall be backfilled with impervious material at each end.

The removal of the existing box culvert, headwalls, and wingwalls is included in Removal of Existing Structures. The removal of the existing stone riprap and broken concrete in order to complete the proposed work is included in Removal of Existing Structures.

There is a large piece of concrete that was poured in place downstream of the culvert and along the channel bank. This concrete needs to be removed for the proposed improvements and will be paid for as Concrete Removal.

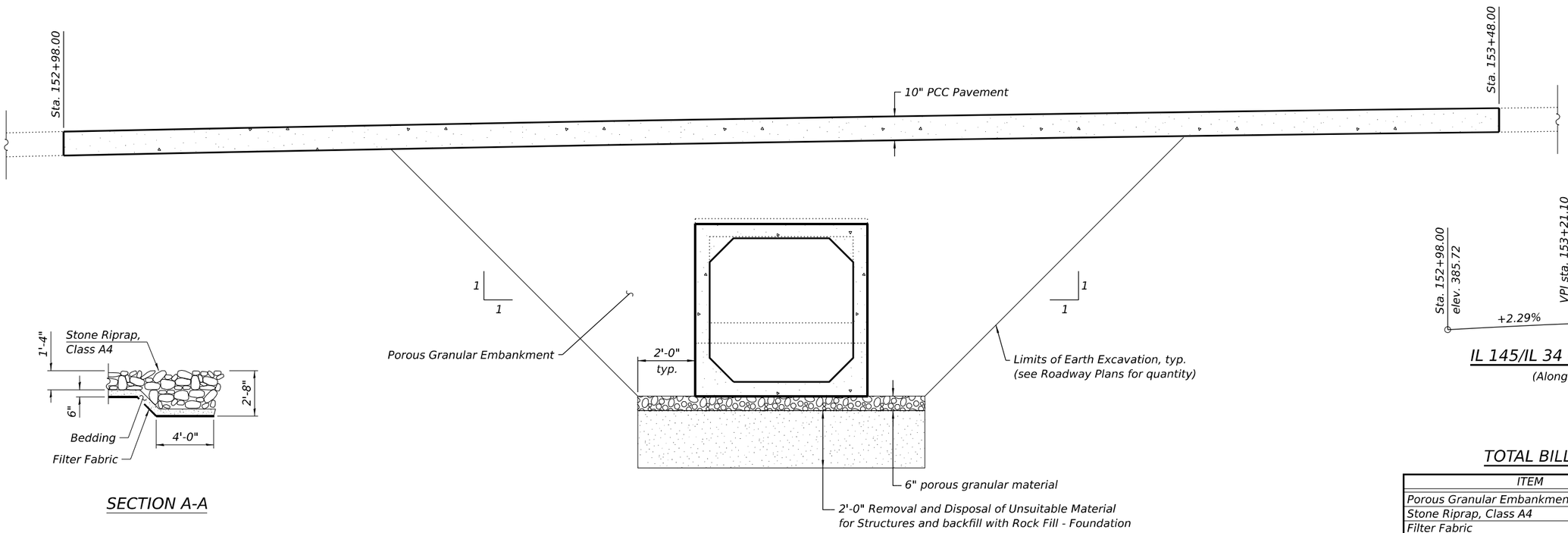

SECTION ALONG ROADWAY SHOWING POROUS GRANULAR EMBANKMENT

SECTION A-A

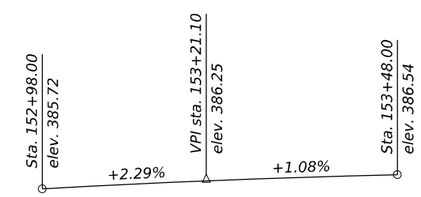

IL 145/IL 34 PROFILE GRADE

(Along ℄ roadway)

WATERWAY INFORMATION

Drainage Area = 44 acres Low EOP elev. 386.06 at sta. 153+22.60

Flood	Freq. Yr.	Q C.F.S.	Headwater Elevation Existing	Headwater Elevation Proposed
	10	54	383.7	380.1
Design	50	78	384.4	380.8
Base	100	92	384.8	381.2
Max. Calc.	500	117	385.7	381.8

TOTAL BILL OF MATERIAL

ITEM	UNIT	TOTAL
Porous Granular Embankment	Cu. Yd.	214
Stone Riprap, Class A4	Sq. Yd.	136
Filter Fabric	Sq. Yd.	131
Removal of Existing Structures No. 3	Each	1
Concrete Removal	Cu. Yd.	16
Removal and Disposal of Unsuitable Material for Structures	Cu. Yd.	57
Reinforcement Bars, Epoxy Coated	Pound	1640
Box Culvert End Sections, Culvert No. 3	Each	1
Concrete Box Culverts	Cu. Yd.	9.5
Precast Concrete Box Culverts 5' x 5'	Foot	57
Rock Fill - Foundation	Ton	86

DROP STRUCTURE NOTES

1. The box culvert drop structure shall be cast-in-place concrete and constructed according to the requirements of Section 540 of the Standard Specifications except as modified herein.
2. One weep hole shall be provided in each wingwall and the end wall. The weep holes shall be located within the lower ⅓ of the clear rise of the box culvert and shall conform to the requirements of Article 503.11 of the Standard Specifications.
3. Shop drawings that detail the reinforcement layout for the drop structure shall be provided to the Engineer for review and approval.

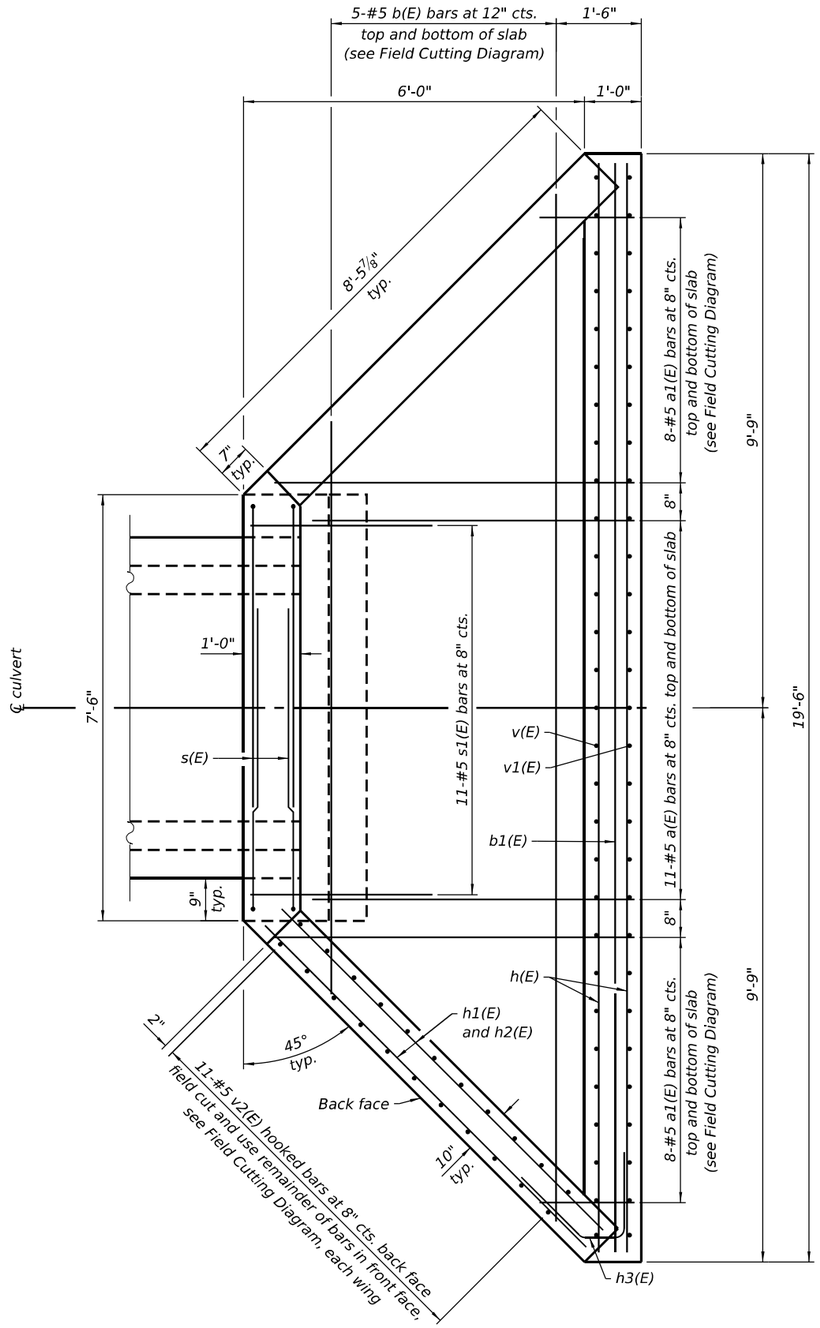

PLAN

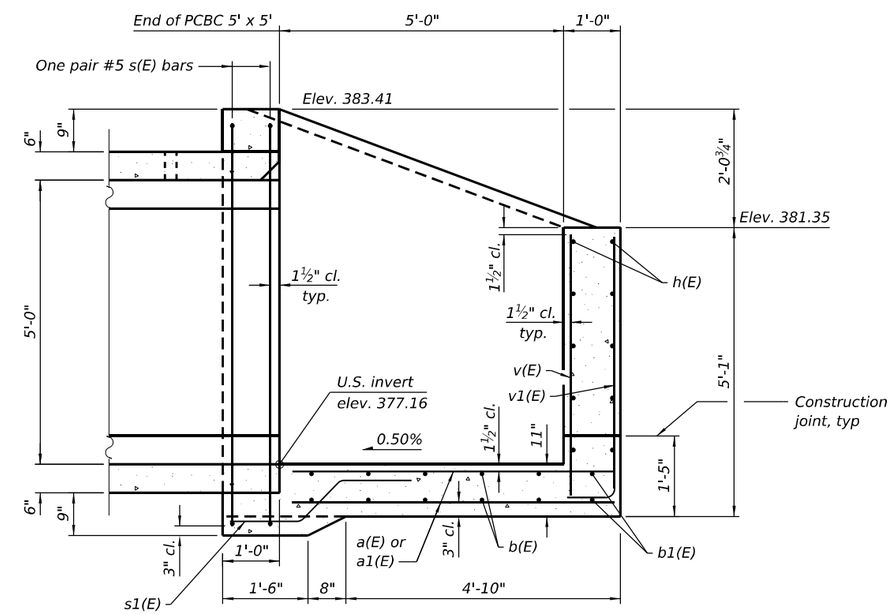

LONGITUDINAL SECTION

(Sheet 1 of 2)

ESCA CONSULTANTS, INC. CIVIL & STRUCTURAL ENGINEERS	USER NAME = nhc	DESIGNED - ARD 01/25	REVISED -	STATE OF ILLINOIS DEPARTMENT OF TRANSPORTATION	CAST-IN-PLACE DROP STRUCTURE EXISTING SN 083-7022
	ESCA PROJECT NO.= 1423.07	CHECKED - ELH 01/25	REVISED -		
	PLOT SCALE = 0:2 ':" / in.	DRAWN - NHC 03/25	REVISED -		
	PLOT DATE = 3/3/2025	CHECKED - ELH 03/25	REVISED -		SHEET 3 OF 6 SHEETS

F.A.P. RTE.	SECTION	COUNTY	TOTAL SHEETS	SHEET NO.
132/869	1CR-1;103CR-1;103CR-2	SALINE	59	50
		CONTRACT NO. 78399		
		ILLINOIS FED. AID PROJECT		

MODEL: Sheet
FILE NAME: Y:\IDOT\1423-07_78399\78399 DESIGN\CADD\SP SN 083-7022\0837022-78399-03-DropBox.dgn
3/3/2025 11:48:04 AM

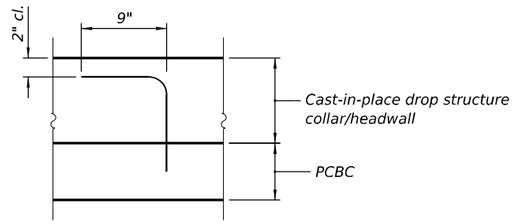

DETAIL A

The cast-in-place drop structure shall be tied to the precast barrel using expansion bolts. Expansion bolts shall be ¾" diameter hooked bolts, cost included in Precast Concrete Box Culverts 5' x 5'.

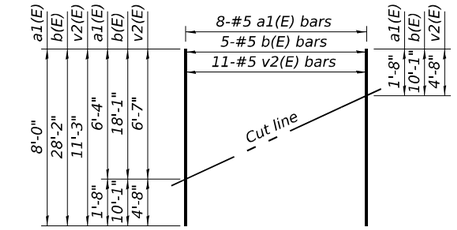

FIELD CUTTING DIAGRAM

Order a1(E), b(E), and v2(E) full length. Cut as shown and use remainder of bars in opposite face of wing or slab

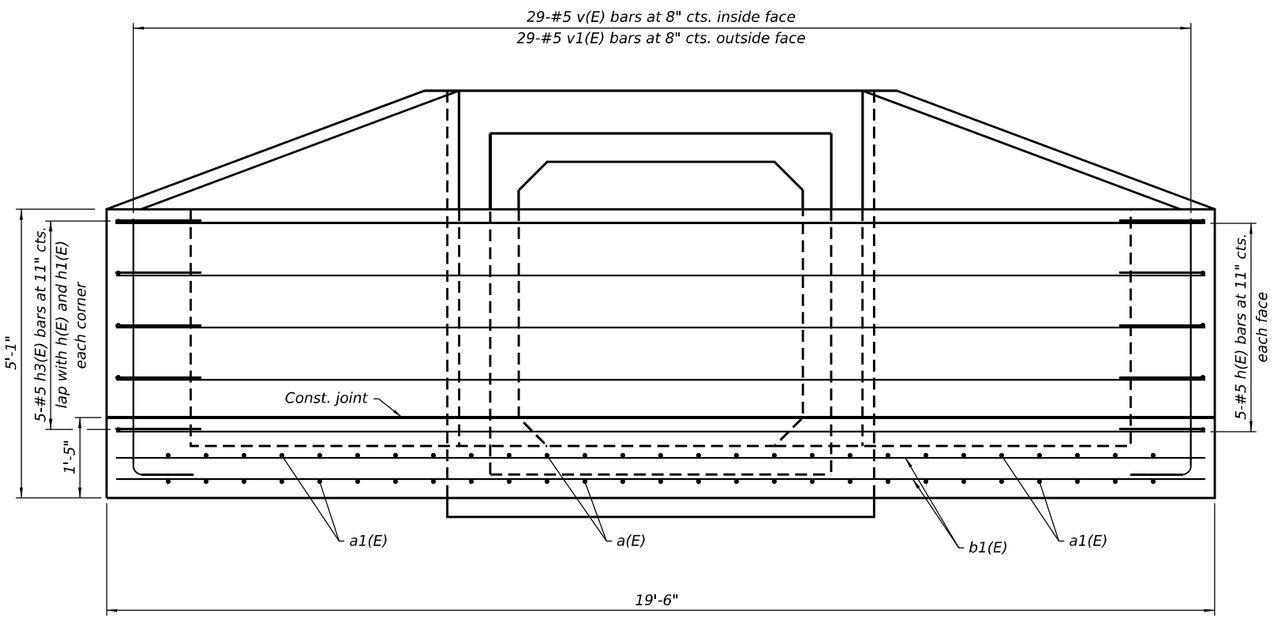

WEST END VIEW

(Only end wall and slab bars shown)

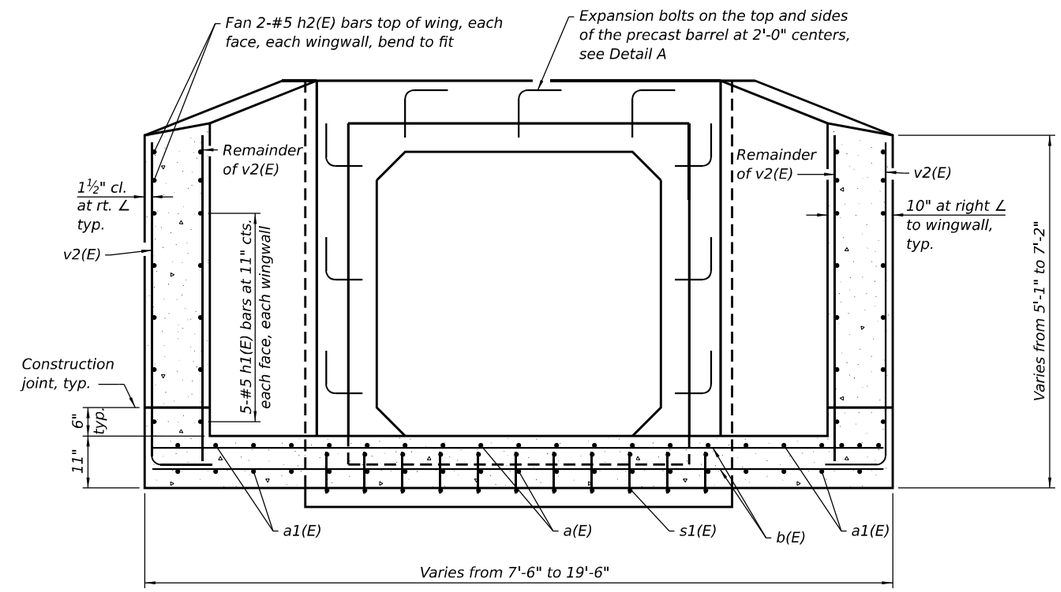

SECTION THRU WINGWALLS

(Only wingwall and slab bars shown)

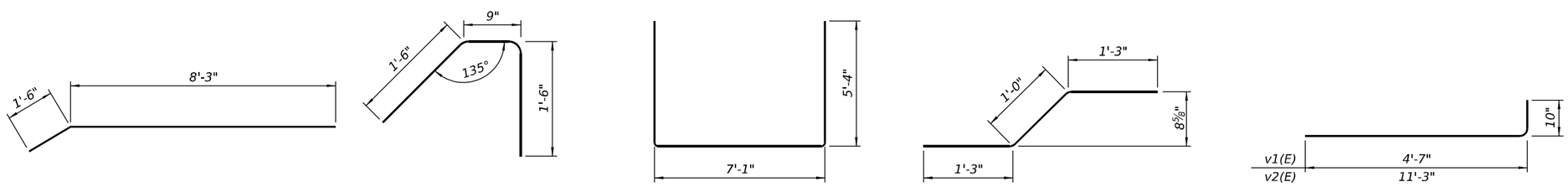

BAR h2(E) | BAR h3(E) | BAR s(E) | BAR s1(E) | BARs v1(E) & v2(E)

BILL OF MATERIAL

Bar	No.	Size	Length	Shape
a(E)	22	#5	5'-8"	
a1(E)	16	#5	8'-0"	
b(E)	5	#5	28'-2"	
b1(E)	2	#5	19'-2"	
h(E)	10	#5	19'-2"	
h1(E)	20	#5	8'-0"	
h2(E)	8	#5	9'-9"	
h3(E)	10	#5	3'-9"	
s(E)	4	#5	17'-9"	
s1(E)	11	#5	3'-6"	
v(E)	29	#5	4'-7"	
v1(E)	29	#5	5'-5"	
v2(E)	22	#5	12'-1"	
Reinforcement Bars, Epoxy Coated			Pound	1640
Conrete Box Culverts			Cu. Yd.	9.5

(Sheet 2 of 2)

ESCA CONSULTANTS, INC. CIVIL & STRUCTURAL ENGINEERS

USER NAME = nhc	DESIGNED -	ARD	01/25	REVISED -	
ESCA PROJECT NO.= 1423.07	CHECKED -	ELH	01/25	REVISED -	
PLOT SCALE = 0:2 ':" / in.	DRAWN -	NHC	02/25	REVISED -	
PLOT DATE = 3/3/2025	CHECKED -	ELH	02/25	REVISED -	

STATE OF ILLINOIS
DEPARTMENT OF TRANSPORTATION

CAST-IN-PLACE DROP STRUCTURE
EXISTING SN 083-7022

SHEET 4 OF 6 SHEETS

F.A.P. RTE.	SECTION	COUNTY	TOTAL SHEETS	SHEET NO.
132/869	1CR-1;103CR-1;103CR-2	SALINE	59	51

CONTRACT NO. 78399

ILLINOIS | FED. AID PROJECT

MODEL: Sheet
FILE NAME: Y:\IDOT\1423-07_78399\78399 DESIGN\CADD\SP SN 083-7022\0837022-78399-04-DropBox.dgn

3/3/2025 11:48:05 AM

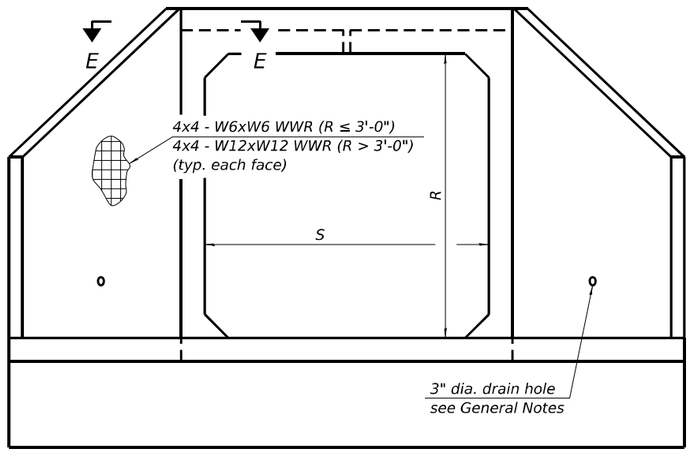

END VIEW

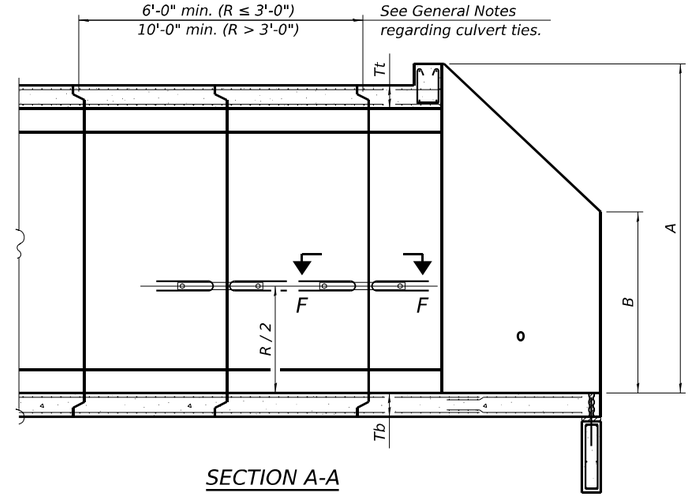

SECTION A-A

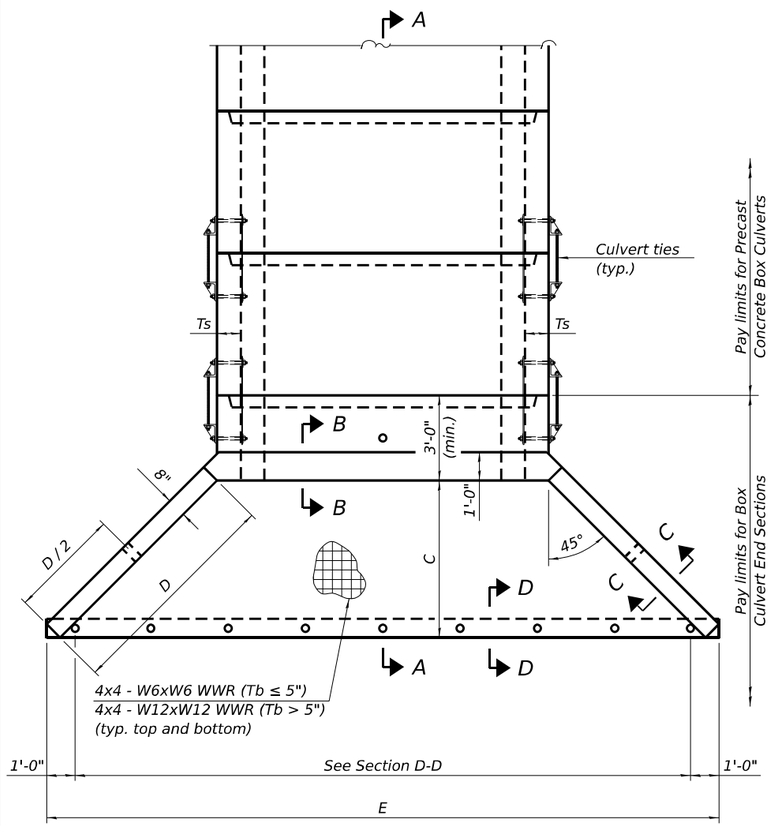

PLAN

GENERAL NOTES

Box Culvert End Sections shall be constructed according to the requirements of Section 540 of the Standard Specifications except as modified herein. End sections will be paid for at the contract unit price per each for Box Culvert End Sections.

The Contractor may furnish the end section as a single precast concrete piece or construct the end section in the field using cast-in-place (CIP) construction. For CIP construction, the bottom slab thickness shall be increased by 2" and the clear cover to the bottom mat of reinforcement shall be increased to 3".

Box section dimensions, materials, and reinforcement details for Box Culvert End Sections shall be according to the requirements for ASTM C 1577 as required for the design of the portion of the culvert within the limits of Precast Concrete Box Culverts except as modified herein.

The number of culvert ties shall be sufficient to engage the minimum length of culvert barrel shown within the pay limits for Precast Concrete Box Culverts and will be dependent upon the length of box culvert segments furnished by the Contractor. Culvert ties are not required for box culverts having a rise (R) less than or equal to 3 ft and a span (S) greater than or equal to 10 ft.

All costs associated with furnishing and installing or constructing the toewall and culvert ties will not be measured for payment but shall be included in the unit price for Box Culvert End Sections of the culvert number specified.

Shop drawings that detail slab thickness and reinforcement layout for the Box Culvert End Sections shall be provided to the Engineer for review and approval. Reinforcement bars not detailed herein shall be detailed with a clear distance at the end of the reinforcement not less than ½" nor more than 2". For the precast option, it shall be the Contractor's responsibility for determining a method of handling and a construction procedure shall be included on the shop drawings. The Contractor shall determine and detail in the shop drawings any necessary strengthening or stiffening provisions necessary to handle the precast segment. Any required modifications shall be at no extra charge.

The Contractor may use reinforcement bars in lieu of welded wire reinforcement (WWR). Reinforcement bars shall be limited to the sizes of #3 through #5 bars, a maximum spacing of the lesser of 8" or the member thickness, and shall result in an area of reinforcement equal to or greater than that provided by the WWR. Minimum lap lengths detailed herein are applicable to WWR and reinforcement bars.

Reinforcement (circumferential and longitudinal) in the culvert barrel portion of the end section being lapped with reinforcement from the wingwalls or bottom slab of the end section shall not be less than that required by ASTM C 1577 for the design fill height or the reinforcement detailed for the end section, whichever is greater.

One drain hole shall be provided in each wingwall for end sections of box culverts having an opening with a clear rise greater than 3 ft. The drain hole shall be located within the lower 1/3 of the clear rise of the box culvert and shall conform to the requirements of Article 503.11 of the Standard Specifications.

APRON END SECTION DIMENSIONS

Span (S)	Rise (R)	Tt	Tb	Ts	A	B	C	D	E	Concrete Cu. Yd.	Culvert Ties Required
3'-0"	2'-0"	7"	6"	4"	3'-4"	2'-2"	2'-10⅝"	4'-1"	10'-4⅝"	2.8	Yes
3'-0"	2'-0"	4"	4"	4"	3'-1"	2'-1"	2'-7⅞"	3'-9"	9'-11"	2.3	Yes
3'-0"	3'-0"	7"	6"	4"	4'-4"	2'-8"	3'-10⅝"	5'-6"	12-4⅝"	3.7	Yes
3'-0"	3'-0"	4"	4"	4"	4'-1"	2'-7"	3'-7⅞"	5'-2"	11'-11"	3.1	Yes
4'-0"	2'-0"	7.5"	6"	5"	3'-4½"	2'-2½"	2'-11⅜"	4'-2"	11'-8"	3.3	Yes
4'-0"	2'-0"	5"	5"	5"	3'-2"	2'-1"	2'-8½"	3'-10"	11'-2⅜"	2.8	Yes
4'-0"	3'-0"	7.5"	6"	5"	4'-4½"	2'-8½"	3'-11⅜"	5'-7"	13'-8⅛"	4.2	Yes
4'-0"	3'-0"	5"	5"	5"	4'-2"	2'-7"	3'-8½"	5'-3"	13'-2⅜"	3.7	Yes
4'-0"	4'-0"	7.5"	6"	5"	5'-4½"	3'-2½"	4'-11⅜"	7'-0"	15'-8⅛"	5.3	Yes
4'-0"	4'-0"	5"	5"	5"	5'-2"	3'-1"	4'-8⅝"	6'-8"	15'-2½"	4.7	Yes
5'-0"	2'-0"	8"	7"	6"	3'-5"	2'-3"	2'-11⅜"	4'-2"	12'-10"	3.9	Yes
5'-0"	2'-0"	6"	6"	6"	3'-3"	2'-2"	2'-10"	4'-0"	12'-7¼"	3.5	Yes
5'-0"	3'-0"	8"	7"	6"	4'-5"	2'-9"	3'-11⅜	5'-7"	14'-10⅛"	4.9	Yes
5'-0"	3'-0"	6"	6"	6"	4'-3"	2'-8"	3'-10"	5'-5"	14'-7¼"	4.5	Yes
5'-0"	4'-0"	8"	7"	6"	5'-5"	3'-3"	4'-11⅜"	7'-0"	16'-10⅛"	6.1	Yes
5'-0"	4'-0"	6"	6"	6"	5'-3"	3'-2"	4'-9¼"	6'-9"	16'-5⅞"	5.5	Yes
5'-0"	5'-0"	8"	7"	6"	6'-5"	3'-9"	5'-11⅜"	8'-5"	18'-10⅛"	7.4	Yes
5'-0"	5'-0"	6"	6"	6"	6'-3"	3'-8"	5'-9¼"	8'-2"	18'-5⅞"	6.8	Yes
6'-0"	2'-0"	8"	7"	7"	3'-5"	2'-3"	2'-11⅜"	4'-2"	14'-0"	4.3	Yes
6'-0"	2'-0"	7"	7"	7"	3'-4"	2'-2"	2'-10⅝"	4'-1"	13'-10⅝"	4.2	Yes
6'-0"	3'-0"	8"	7"	7"	4'-5"	2'-9"	3'-11⅜"	5'-7"	16'-0⅛"	5.4	Yes
6'-0"	3'-0"	7"	7"	7"	4'-4"	2'-8"	3'-10⅝"	5'-6"	15'-10⅝"	5.2	Yes
6'-0"	4'-0"	8"	7"	7"	5'-5"	3'-3"	4'-11⅜"	7'-0"	18'-0⅛"	6.5	Yes
6'-0"	4'-0"	7"	7"	7"	5'-4"	3'-2"	4'-10¾"	6'-11"	17'-10¾"	6.5	Yes
6'-0"	5'-0"	8"	7"	7"	6'-5"	3'-9"	5'-11⅜"	8'-5"	20'-0⅛"	8.0	Yes
6'-0"	5'-0"	7"	7"	7"	6'-4"	3'-8"	5'-10¾"	8'-4"	19'-10¾"	7.8	Yes
6'-0"	6'-0"	8"	7"	7"	7'-5"	4'-3"	6'-11½"	9'-10"	22'-0¼"	9.5	Yes
6'-0"	6'-0"	7"	7"	7"	7'-4"	4'-2"	6'-10¾"	9'-9"	21'-10¾"	9.3	Yes
7'-0"	2'-0"	8"	8"	8"	3'-5"	2'-3"	2'-11⅜"	4'-2"	15'-2"	4.9	Yes
7'-0"	3'-0"	8"	8"	8"	4'-5"	2'-9"	3'-11⅜"	5'-7"	17'-2⅛"	6.1	Yes
7'-0"	4'-0"	8"	8"	8"	5'-5"	3'-3"	4'-11⅜"	7'-0"	19'-2⅛"	7.4	Yes
7'-0"	5'-0"	8"	8"	8"	6'-5"	3'-9"	5'-11⅜"	8'-5"	21'-2⅛"	8.9	Yes
7'-0"	6'-0"	8"	8"	8"	7'-5"	4'-3"	6'-11½"	9'-10"	23'-2¼"	10.6	Yes
8'-0"	2'-0"	8"	8"	8"	3'-5"	2'-3"	2'-11⅜"	4'-2"	16'-2"	5.3	Yes
8'-0"	3'-0"	8"	8"	8"	4'-5"	2'-9"	3'-11⅜"	5'-7"	18'-2⅛"	6.5	Yes
8'-0"	4'-0"	8"	8"	8"	5'-5"	3'-3"	4'-11⅜"	7'-0"	20'-2⅛"	7.8	Yes
8'-0"	5'-0"	8"	8"	8"	6'-5"	3'-9"	5'-11⅜"	8'-5"	22'-2⅛"	9.3	Yes
8'-0"	6'-0"	8"	8"	8"	7'-5"	4'-3"	6'-11½"	9'-10"	24'-2¼"	11.0	Yes
9'-0"	2'-0"	9"	9"	9"	3'-6"	2'-3"	3'-0¾"	4'-4"	17'-6⅞"	6.2	Yes
9'-0"	3'-0"	9"	9"	9"	4'-6"	2'-9"	4'-0¾"	5'-9"	19'-6⅞"	7.5	Yes
9'-0"	4'-0"	9'	9"	9"	5'-6"	3'-3"	5'-0¾"	7'-2"	21'-6⅞"	9.0	Yes
9'-0"	5'-0"	9"	9"	9"	6'-6"	3'-9"	6'-0⅞"	8'-7"	23'-7"	10.6	Yes
9'-0"	6'-0"	9"	9"	9"	7'-6"	4'-3"	7'-0⅛"	9'-11"	25'-5⅝"	12.4	Yes
10'-0"	2'-0"	10"	10"	10"	3'-7"	2'-4"	3'-1½"	4'-5"	18'-10¼"	7.1	No
10'-0"	3'-0"	10"	10"	10"	4'-7"	2'-10"	4'-1½"	5'-10"	20'-10¼"	8.6	No
10'-0"	4'-0"	10"	10"	10"	5'-7"	3'-4"	5'-1½"	7'-3"	22'-10⅜"	10.2	Yes
10'-0"	5'-0"	10"	10"	10"	6'-7"	3'-10"	6'-1½"	8'-8"	24'-10⅜"	12.0	Yes
10'-0"	6'-0"	10"	10"	10"	7'-7"	4'-4"	7'-1½"	10'-1"	26'-10⅜"	13.9	Yes
11'-0"	2'-0"	11"	11"	11"	3'-8"	2'-4"	3'-2⅞"	4'-7"	20'-3⅛"	8.2	No
11'-0"	3'-0"	11"	11"	11"	4'-8"	2'-10"	4'-2⅞"	6'-0"	22'-3⅛"	9.8	No
11'-0"	4'-0"	11"	11"	11"	5'-8"	3'-4"	5'-2¼"	7'-4"	24'-1¾"	11.5	Yes
11'-0"	5'-0"	11"	11"	11"	6'-8"	3'-10"	6'-2¼"	8'-9"	26'-1¾"	13.3	Yes
11'-0"	6'-0"	11"	11"	11"	7'-8"	4'-4"	7'-2¼"	10'-2"	28'-1⅞"	15.5	Yes
12'-0"	2'-0"	12"	12"	12"	3'-9"	2'-5"	3'-3⅝"	4'-8"	21'-6½"	9.3	No
12'-0"	3'-0"	12"	12"	12"	4'-9"	2'-11"	4'-3⅝"	6'-1"	23'-6½"	11.1	No
12'-0"	4'-0"	12"	12"	12"	5'-9"	3'-5"	5'-3⅝"	7'-6"	25'-6⅝"	13.0	Yes
12'-0"	5'-0"	12"	12"	12"	6'-9"	3'-11"	6'-3⅝"	8'-11"	27'-6⅝"	14.1	Yes
12'-0"	6'-0"	12"	12"	12"	7'-9"	4'-5"	7'-3⅝"	10'-4"	29'-6⅝"	17.4	Yes

Note:
Two sets of apron end section dimensions are shown above for some box culvert sizes due to the top and bottom slabs having different thicknesses per ASTM C 1577 for design fill heights less than 2 ft.

(Sheet 1 of 2)

SCB-AES 5-15-2023

MODEL: Sheet
FILE NAME: Y:\IDOT\1423-07_78399\78399 DESIGN\CADD\SP SN 083-7022\0837022-78399-05-PrecastBCAEndSectDtls.dgn

ESCA CONSULTANTS, INC.
CIVIL & STRUCTURAL ENGINEERS

USER NAME = nhc	DESIGNED - ELH 12/24	REVISED -	STATE OF ILLINOIS DEPARTMENT OF TRANSPORTATION	PRECAST CONCRETE BOX CULVERT APRON END SECTION DETAILS - EXISTING SN 083-7022	
ESCA PROJECT NO.= 1423.07	CHECKED - ARD 12/24	REVISED -			
PLOT SCALE = 0:2 ':" / in.	DRAWN - NHC 12/24	REVISED -			
PLOT DATE = 3/3/2025	CHECKED - ELH 12/24	REVISED -		SHEET 5 OF 6 SHEETS	

F.A.P. RTE.	SECTION	COUNTY	TOTAL SHEETS	SHEET NO.
132/869	1CR-1;103CR-1;103CR-2	SALINE	59	52
		CONTRACT NO. 78399		
	ILLINOIS	FED. AID PROJECT		

3/3/2025 11:48:06 AM

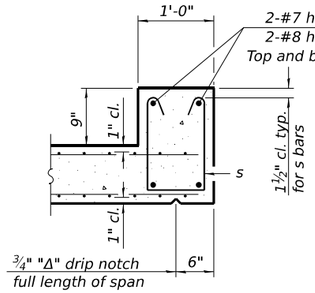

SECTION B-B
(Top slab at downstream end)

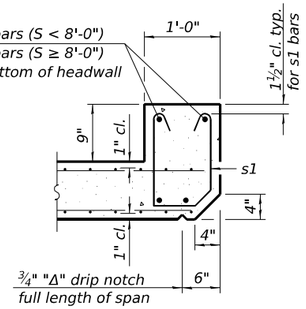

SECTION B-B
(Top slab at upstream end)

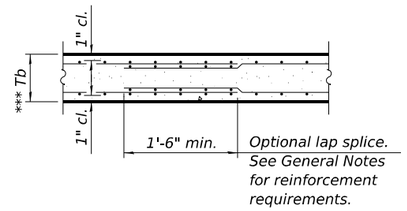

SECTION B-B
(Bottom Slab)

*** This dimension shall be increased by 2" for CIP construction.

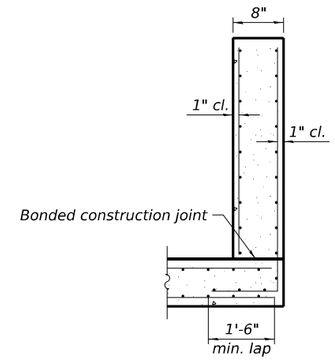

SECTION C-C

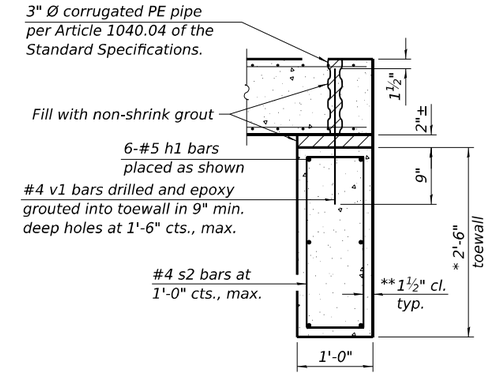

SECTION D-D

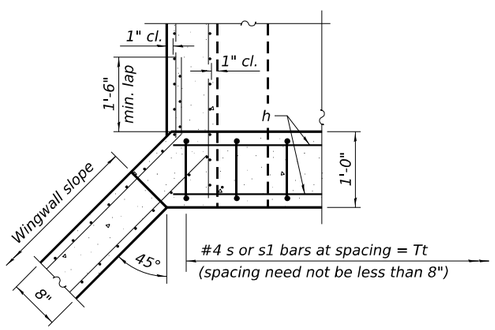

SECTION E-E

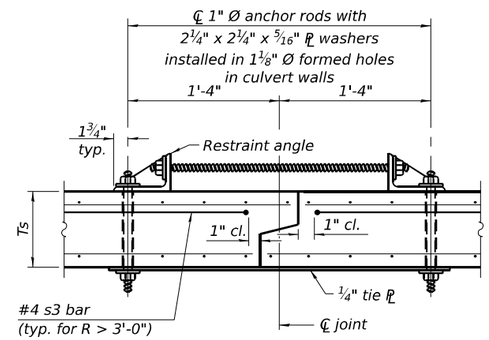

SECTION F-F
(Showing culvert tie details)

TOEWALL CONSTRUCTION SEQUENCE

1. Perform excavation and construct toewall.
2. Backfill accordingly and place bedding for precast box culvert end sections.
3. Set precast box culvert end section.
4. Drill and epoxy grout reinforcement in toewall in accordance with Section 584 of the Standard Specifications.
5. Pressure grout voids using non-shrink grout conforming to Section 1024 of the Standard Specifications.

* The Contractor may furnish a precast or cast-in-place toewall. The Contractor shall be responsible for the strength and stability of the precast toewall during handling. Additional lifting points may be required depending upon the length of the toewall or the Contractor may need to modify the design of the toewall for the proposed handling method.

** If soil conditions permit, the sides of the toewall may be poured directly against the soil. The clear cover on the sides of the toewall shall be increased to 3" by increasing the thickness of the toewall.

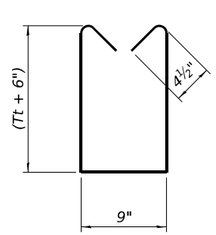

BAR s

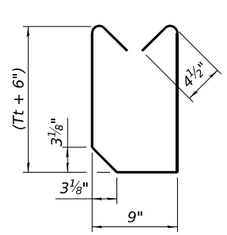

BAR s1

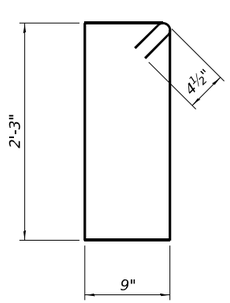

BAR s2

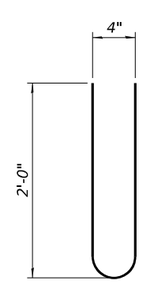

BAR s3

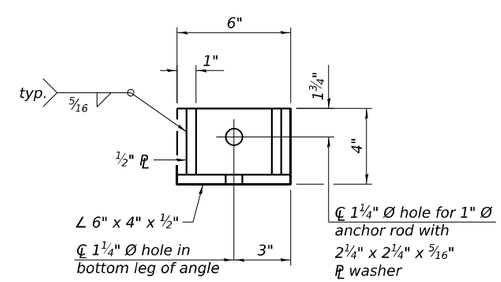

RESTRAINT ANGLE DETAIL

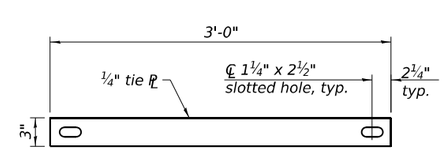

TIE PLATE DETAIL

Notes:

1" Ø anchor rods for the culvert ties shall conform to the requirements of ASTM F1554, Grade 105. Structural steel for the tie plate and restraint angle shall conform to the requirements of Article 1006.04 of the Standard Specifications. All components of the culvert tie detail shall be galvanized according to the requirements of AASHTO M 111 or M 232 as applicable. 2¼"x2¼"x5/16" plate washers shall be provided under each nut required for the anchor rods. Anchor rods connecting precast sections shall be brought to a snug tight condition followed by an additional ½ turn on one of the nuts for anchor rods installed in the walls. Match marks shall be provided on the bolt and nut to verify relative rotation between the bolt and the nut. Holes in the walls for the culvert tie assembly may be drilled using core bits in lieu of using formed holes.

SCB-AES 5-15-2023

(Sheet 2 of 2)

ESCA CONSULTANTS, INC.	USER NAME = nhc	DESIGNED - ELH 12/24	REVISED -	STATE OF ILLINOIS DEPARTMENT OF TRANSPORTATION	PRECAST CONCRETE BOX CULVERT APRON END SECTION DETAILS - EXISTING SN 083-7022
	ESCA PROJECT NO.= 1423.07	CHECKED - ARD 12/24	REVISED -		
	PLOT SCALE = 0:2 ':" / in.	DRAWN - NHC 12/24	REVISED -		
	PLOT DATE = 3/3/2025	CHECKED - ELH 12/24	REVISED -		SHEET 6 OF 6 SHEETS

F.A.P. RTE.	SECTION	COUNTY	TOTAL SHEETS	SHEET NO.
132/869	1CR-1;103CR-1;103CR-2	SALINE	59	53
		CONTRACT NO. 78399		
		ILLINOIS FED. AID PROJECT		

MODEL: Sheet
FILE NAME: Y:\IDOT\1423-07_78399\78399 DESIGN\CADD\SP SN 083-7022\0837022-78399-06-PrecastBCAE\n5SecDtls.dgn
3/3/2025 11:48:07 AM

STATE OF ILLINOIS
DEPARTMENT OF PUBLIC WORKS & BUILDINGS
DIVISION OF HIGHWAYS

132	#	SALINE	125	59

* 1(WRS-1), 18-1-DR

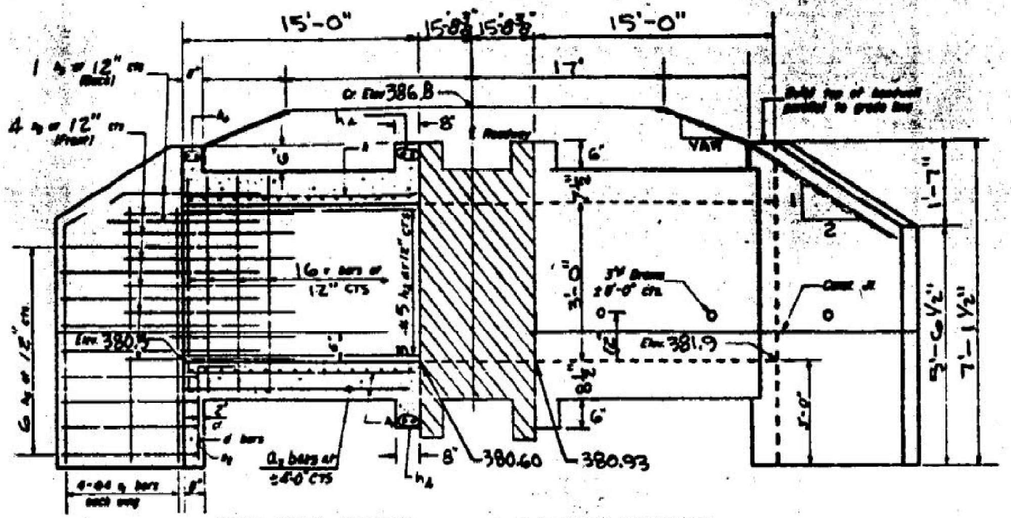

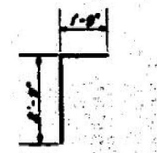

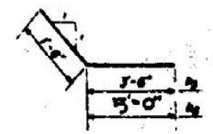

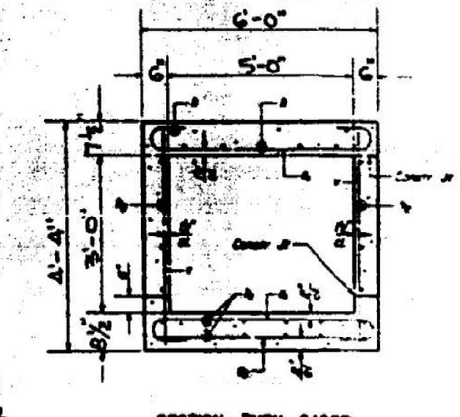

EXIST. CULVERT

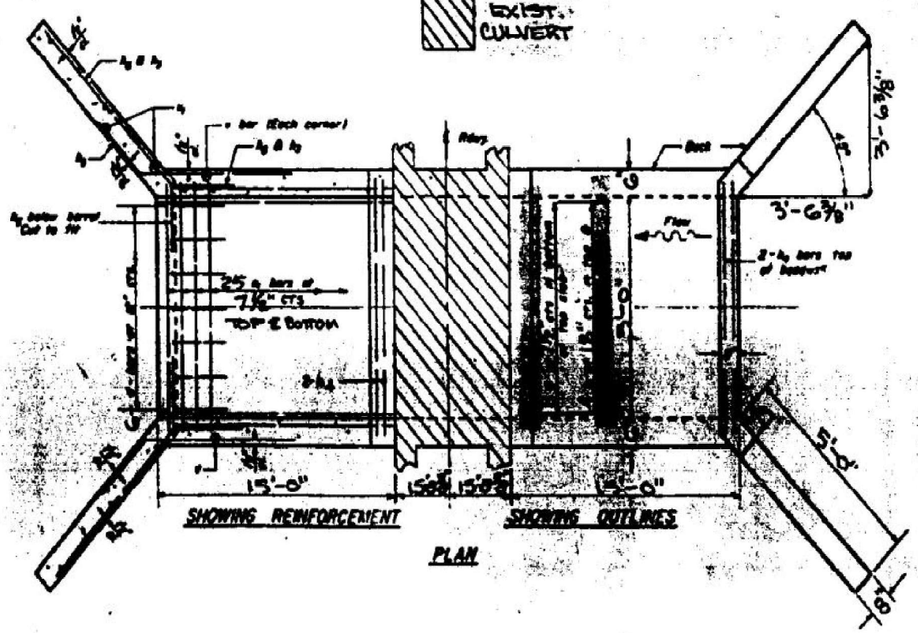

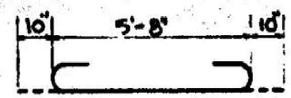

BILL OF MATERIAL

Bar	No.	No. Req.	Size	Length LT	Length FT
a	50	50	#7	7'-4"	7'-4"
b	6	6	ea	5'-3"	5'-3"
c	6	6	ea	4'-6"	4'-6"
d	10	10	#5	14'-9"	14'-9"
e	8	8	#5	14'-9"	14'-9"
f	6	6	#5	14'-9"	14'-9"
g	10	10	#4	5'-0"	5'-0"
h	6	6	ea	5'-9"	5'-9"
i	12	12	#4	6'-6"	6'-6"
j	34	34	#4	4'-0"	4'-0"
k	8	8	ea	6'-0"	6'-0"
				LT	FT
[redacted]			Cu Yds	7.9	7.9
[redacted]			Lin	1420	1420
[redacted]			Ea.	12	12
Concrete Rem.			Cu Yds	0	0

NOTES:
FOR DETAILS OF ¾" EXPANSION BOLTS REQUIRED FOR CULVERT EXTENSIONS, SEE SHEET 36.
REMOVE EXISTING MASONRY DROP BOX AT U.S. END OF EXIST BOX. COST INCIDENTAL.

5'x3' BOX CULVERT EXTENSION
STATION 153+28.4
TO BE EXTENDED 15'-0" LT & RT

9-11

GENERAL NOTES

Class X Concrete shall be used throughout.
At least one foot of barrel shall be poured monolithically with wingwalls.
Exposed edges shall be beveled ¾".
For backfilling & embankments see 5'x3' Spec's.
Tie back of "h" bars, if necessary, to obtain 2" minimum clearance of top of back.

All bars shall be lapped 24 diameters unless otherwise specified

f'c = 30,000 psi.
fy = 1400 psi Barrel
fy = 60,0 psi Wings
γ = 90 psi
φ = .9

LOADING HS20-44

REV 12-78 EJ

DESIGNED	RB 11-77
CHECKED	EB 11-77
DRAWN	
CHECKED	

PLANNED
APPROVED

ESCA CONSULTANTS, INC.

USER NAME = atn	DESIGNED -	REVISED -	
ESCA PROJECT NO. = 1423.07	DRAWN - NHC	REVISED -	
	CHECKED - ELH	REVISED -	
PLOT DATE = 2/28/2025	DATE - 01/25	REVISED -	

STATE OF ILLINOIS
DEPARTMENT OF TRANSPORTATION

EXISTING STRUCTURE PLANS EX SN 083-7022
FOR INFORMATION ONLY

SCALE: NONE | SHEET 1 OF 1 SHEETS | STA. | TO STA.

F.A.P. RTE.	SECTION	COUNTY	TOTAL SHEETS	SHEET NO.
132/869	1CR-1; 103CR-1; 103CR-2	SALINE	59	54
		CONTRACT NO. 78399		
		ILLINOIS FED. AID PROJECT		

MODEL: PLOT
FILE NAME: Y:\IDOT\1423-07_78399\78399 DESIGN\CADD\CAD_Sheets 083-7022\D978399 083-7022-sht-rem01.dgn

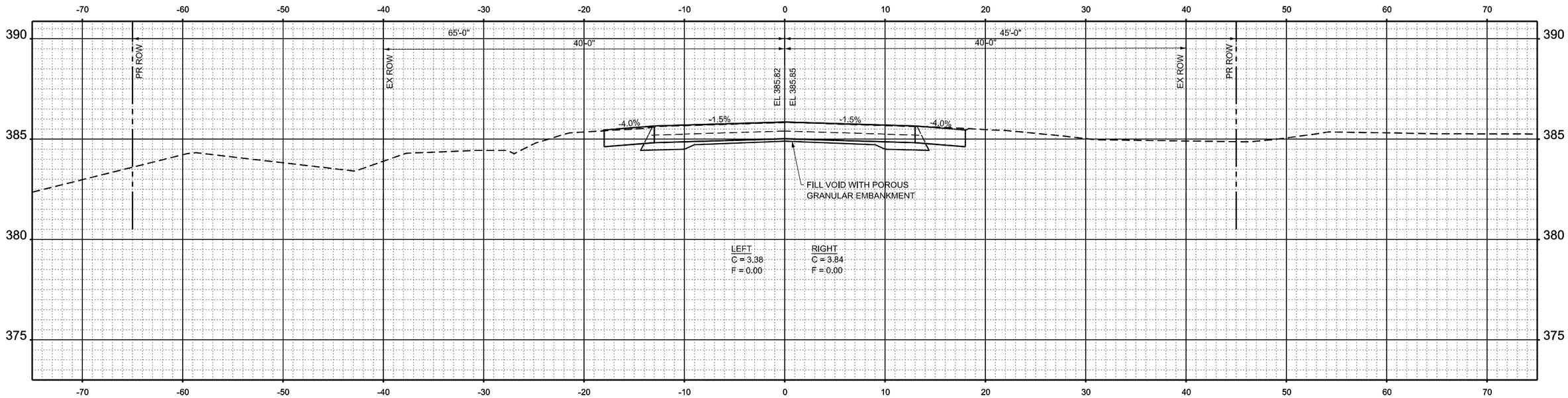

STA 153+05.00

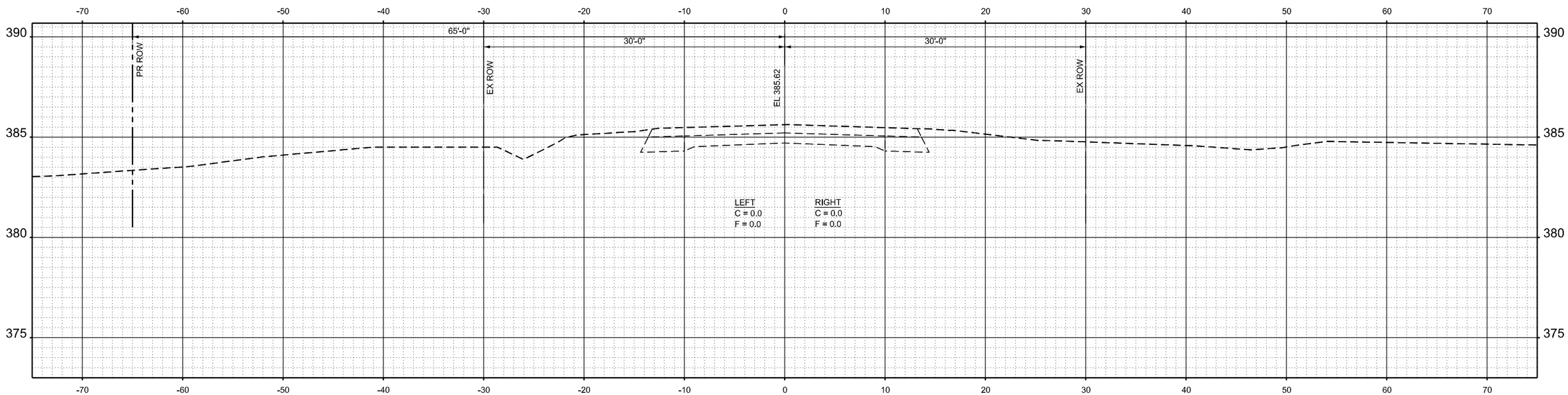

STA 152+95.00
EX FE RT

FINAL SURVEY		BY	DATE
NOTE BOOK	SURVEYED		
	PLOTTED		
	TEMPLATE		
	AREAS		
NO.	AREAS CHECKED		

ORIGINAL SURVEY		BY	DATE
NOTE BOOK	SURVEYED		
	PLOTTED		
	TEMPLATE		
	AREAS		
NO.	AREAS CHECKED		

MODEL: PrCL IL 34 - 152+95.00 [Sheet]
FILE NAME: Y:\DOT\1423-07_78399\78399 DESIGN\CADD\CAD_Sheets 083-7022\D978399 083-7022-sht-xssht.dgn

ESCA CONSULTANTS, INC.
CIVIL & STRUCTURAL ENGINEERS

USER NAME = atn	DESIGNED - ATN	REVISED -	
ESCA PROJECT NO. = 1423.07	DRAWN - ATN	REVISED -	
	CHECKED - ELH	REVISED -	
PLOT DATE = 2/28/2025	DATE - 02/25	REVISED -	

STATE OF ILLINOIS
DEPARTMENT OF TRANSPORTATION

CROSS SECTIONS
EX SN 083-7022

SCALE: AS SHOWN | SHEET 1 OF 3 SHEETS | STA. 152+95.00 TO STA. 153+05.00

F.A.P. RTE.	SECTION	COUNTY	TOTAL SHEETS	SHEET NO.
132/869	1CR-1; 103CR-1; 103CR-2	SALINE	59	55
		CONTRACT NO. 78399		
		ILLINOIS	FED. AID PROJECT	

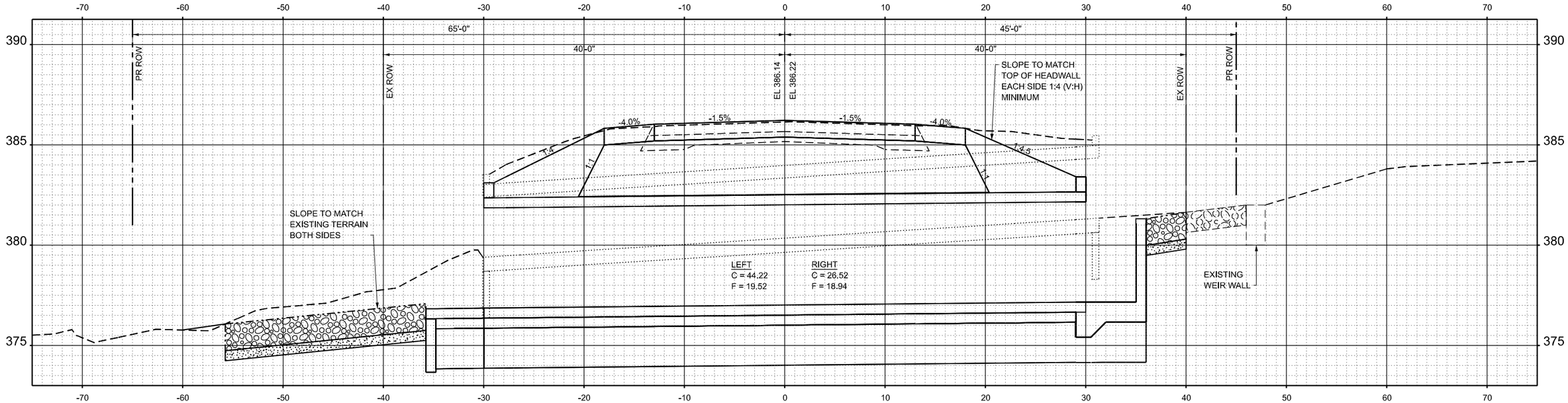

STA 153+21.00

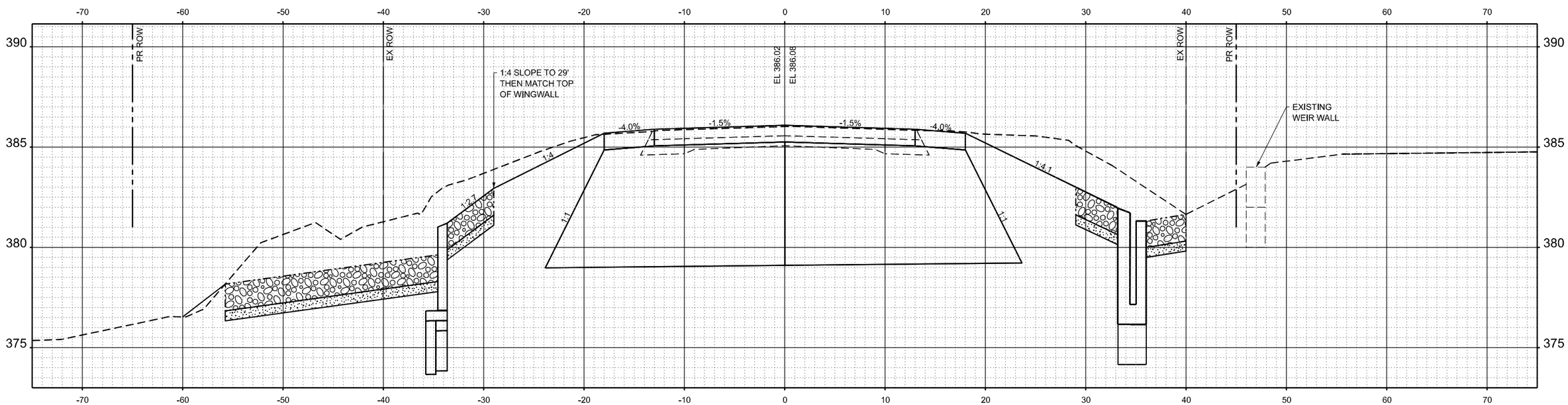

STA 153+15.00

FINAL SURVEY		BY	DATE
NOTE BOOK	SURVEYED		
	PLOTTED		
	TEMPLATE		
	AREAS		
NO.	AREAS CHECKED		

ORIGINAL SURVEY		BY	DATE
NOTE BOOK	SURVEYED		
	PLOTTED		
	TEMPLATE		
	AREAS		
NO.	AREAS CHECKED		

MODEL: PrCL IL 34 - 153+15.00 [Sheet]
FILE NAME: Y:\IDOT\1423-07_78399\78399 DESIGN\CADD\CAD_Sheets 083-7022\D978399 083-7022-sht-xssht.dgn

ESCA CONSULTANTS, INC.
CIVIL & STRUCTURAL ENGINEERS

USER NAME = atn	DESIGNED - ATN	REVISED -
ESCA PROJECT NO. = 1423.07	DRAWN - ATN	REVISED -
	CHECKED - ELH	REVISED -
PLOT DATE = 2/28/2025	DATE - 02/25	REVISED -

STATE OF ILLINOIS
DEPARTMENT OF TRANSPORTATION

CROSS SECTIONS
EX SN 083-7022

SCALE: AS SHOWN | SHEET 2 OF 3 SHEETS | STA. 153+15.00 TO STA. 155+21.00

F.A.P. RTE.	SECTION	COUNTY	TOTAL SHEETS	SHEET NO.
132/869	1CR-1; 103CR-1; 103CR-2	SALINE	59	56
		CONTRACT NO. 78399		
		ILLINOIS	FED. AID PROJECT	

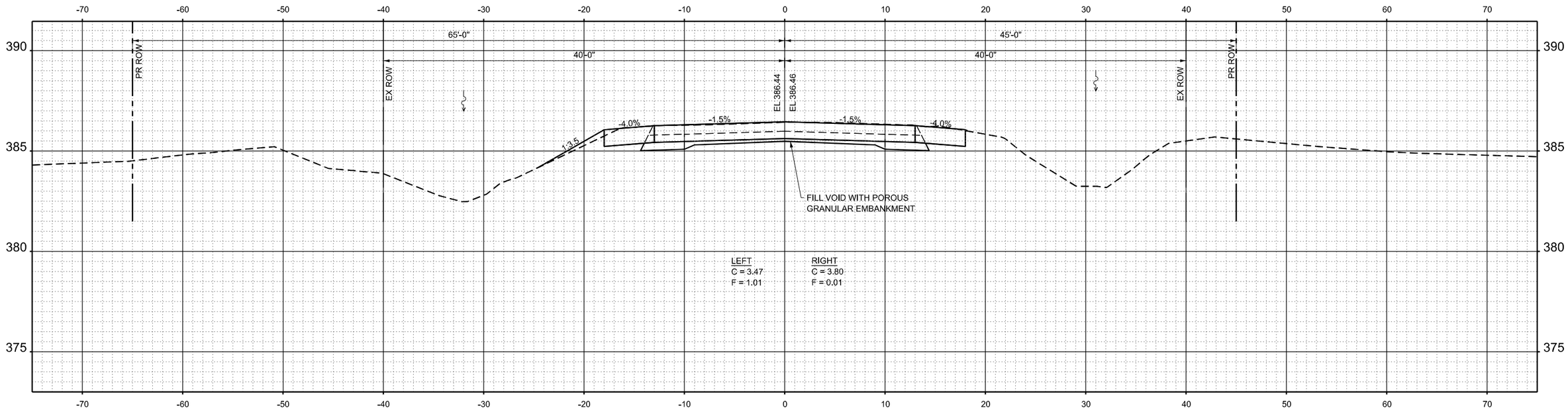

STA 153+40.00

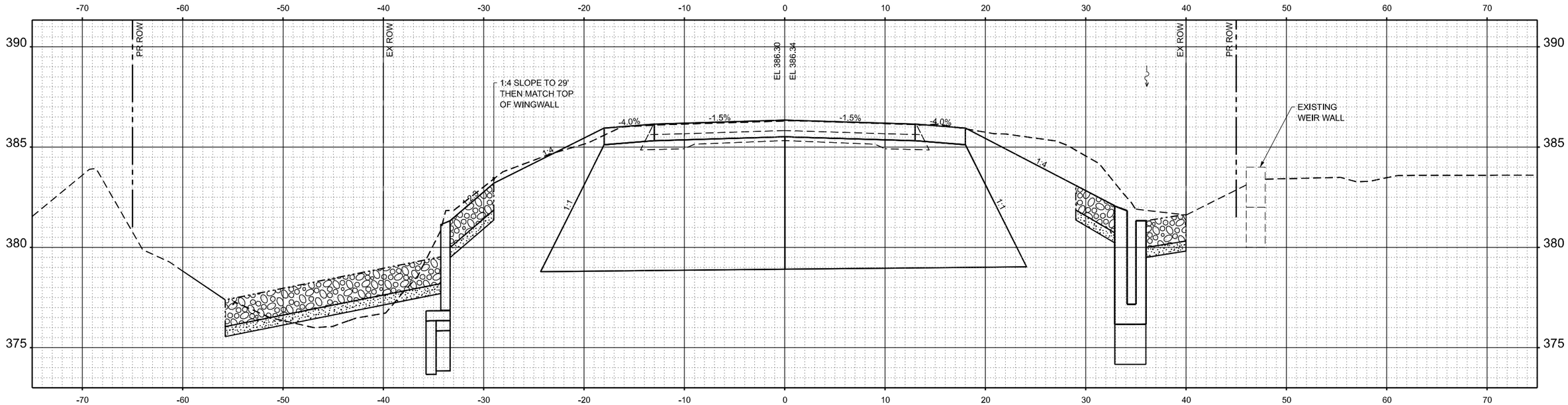

STA 153+30.00

FINAL SURVEY	BY	DATE
SURVEYED		
PLOTTED		
TEMPLATE		
AREAS		
AREAS CHECKED		
NOTE BOOK		
NO.		

ORIGINAL SURVEY	BY	DATE
SURVEYED		
PLOTTED		
TEMPLATE		
AREAS		
AREAS CHECKED		
NOTE BOOK		
NO.		

MODEL: PrCL IL 34 - 153+30.00 [Sheet]
FILE NAME: Y:\IDOT\1423-07_78399\78399 DESIGN\CADD\CAD_Sheets 083-7022\D978399 083-7022-sht-xssht.dgn

ESCA CONSULTANTS, INC.
CIVIL & STRUCTURAL ENGINEERS

USER NAME = atn	DESIGNED - ATN	REVISED -
ESCA PROJECT NO. = 1423.07	DRAWN - ATN	REVISED -
	CHECKED - ELH	REVISED -
PLOT DATE = 2/28/2025	DATE - 02/25	REVISED -

STATE OF ILLINOIS
DEPARTMENT OF TRANSPORTATION

CROSS SECTIONS
EX SN 083-7022

SCALE: AS SHOWN | SHEET 3 OF 3 SHEETS | STA. 153+30.00 TO STA. 153+40.00

F.A.P. RTE.	SECTION	COUNTY	TOTAL SHEETS	SHEET NO.
132/869	1CR-1; 103CR-1; 103CR-2	SALINE	59	57
		CONTRACT NO. 78399		
		ILLINOIS	FED. AID PROJECT	

26′ PCC PAVEMENT
OVER BOX CULVERT

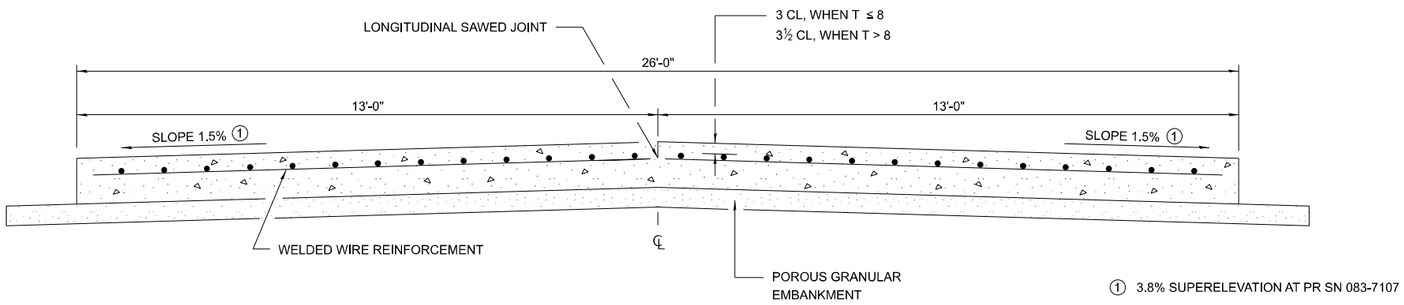

SECTION A–A

(TYPICAL 2-LANE WITH SHOULDERS)

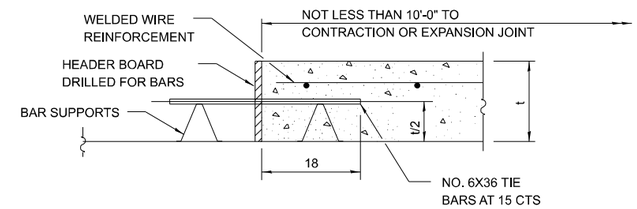

TRANSVERSE CONSTRUCTION JOINT

(IF NEEDED PER STANDARD SPECIFICATIONS)

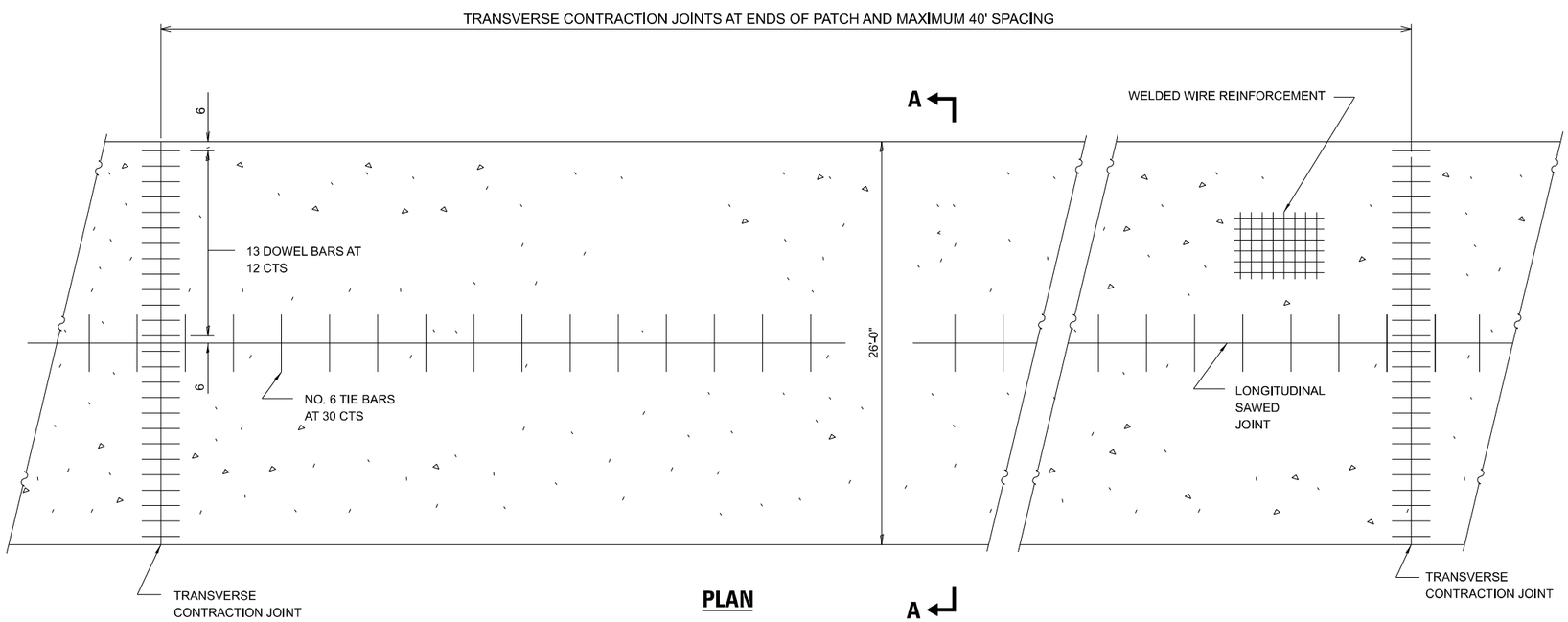

PLAN

GENERAL NOTES

SEE STANDARD 420001 FOR DETAILS NOT SHOWN.

SEE STANDARD 420701 FOR WELDED WIRE REINFORCEMENT DETAILS.

ALL DIMENSIONS ARE IN INCHES UNLESS OTHERWISE SHOWN.

ACTUAL DIMENSIONS TO MATCH FIELD CONDITIONS AND CONSTRUCTION METHODS.

MODEL: PCC over Culvert Sheet
FILE NAME: Y:\IDOT\1423-07_78399\78399 DESIGN\CADD\CAD_Sheets Common\D978399-sht-details01.dgn

ESCA CONSULTANTS, INC.	USER NAME = atn	DESIGNED - ATN	REVISED -	STATE OF ILLINOIS DEPARTMENT OF TRANSPORTATION	PCC PAVEMENT OVER BOX CULVERT			F.A.P. RTE.	SECTION	COUNTY	TOTAL SHEETS / SHEET NO.
	ESCA PROJECT NO. = 1423.07	DRAWN - ATN	REVISED -					132/869	1CR-1; 103CR-1; 103CR-2	SALINE	59 / 58
		CHECKED - ELH	REVISED -							CONTRACT NO. 78399	
	PLOT DATE = 2/25/2025	DATE - 01/25	REVISED -		SCALE: N/A	SHEET 1 OF 1 SHEETS	STA. TO STA.		ILLINOIS	FED. AID PROJECT	

SEEDING & MULCHING

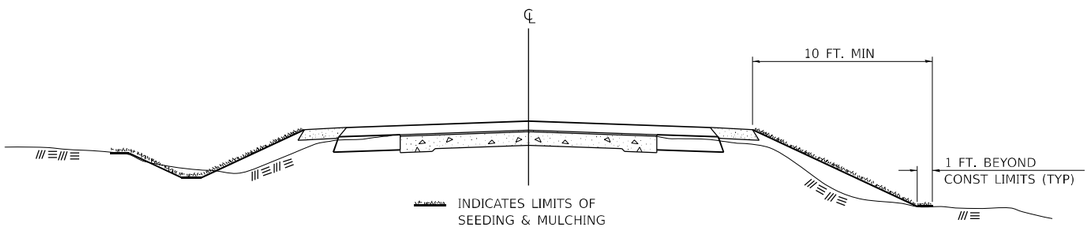

GENERAL NOTES

IN GENERAL, ALL EARTH SURFACES DISTURBED DURING CONSTRUCTION OPERATIONS SHALL BE SEEDED AND MULCHED UPON COMPLETION OF ALL GRADING OPERATIONS.

ON DETOUR ROADS, SLOPES SHALL BE SEEDED IMMEDIATELY UPON COMPLETION OF ANY GIVEN STAGE GRADING. TEMPORARY SEEDING SHALL BE CLASS 7.

FERTILIZER NUTRIENTS SHALL BE APPLIED TO ALL SEEDED AREAS.
LIMESTONE SHALL BE APPLIED TO ALL AREAS OF FINAL SEEDING.

THE RATES OF APPLICATION OF FERTILIZER, MULCH AND LIMESTONE SHALL BE AS SPECIFIED IN THE SPECIAL PROVISIONS FOR ROAD AND BRIDGE CONSTRUCTION.

SECTIONS 250 AND 251 SHALL GOVERN THIS WORK EXCEPT AS SPECIFIED HEREIN OR AS NOTED IN THE SPECIAL PROVISIONS.

STD. 9-12

REVISIONS

REDRAWN	2-15-89
REVISED	8-15-94
REVISED	6-3-99
REVISED	3-27-08
REVISED	5-16-13
REVISED	10-21-21

TYPICAL CROSS SECTION SHOWING STEP CONSTRUCTION ON EXISTING FILL

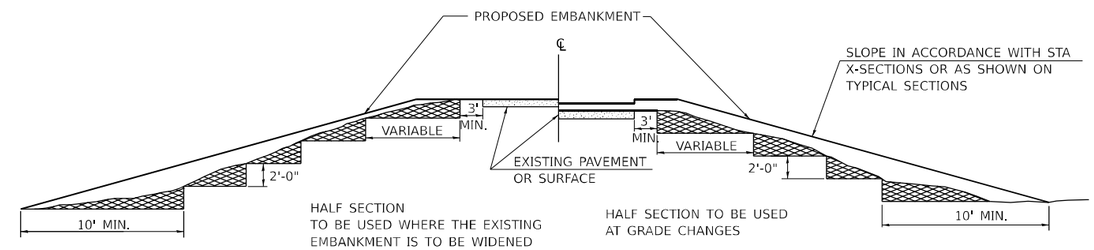

STEPS SHALL BE CUT IN THE EXISTING SLOPE IN ACCORDANCE WITH ART. 205.03 EXCEPT THAT THE REQUIREMENT THAT STEPS SHALL BE CUT INTO THE EXISTING SLOPE BEFORE THE CONTRUCTION OF THE EXISTING EMBANKMENT IS STARTED SHALL NOT APPLY. MATERIAL TO BE REMOVED AND REPLACED IN THE EMBANKMENT IN ACCORDANCE WITH ART. 205.04. COST TO BE INCLUDED IN THE VARIOUS ITEMS OF EXCAVATION AND NO ADDITIONAL COMPENSATION WILL BE ALLOWED BECAUSE OF THIS WORK.

STD. 9-16

REVISIONS

REDRAWN	2-15-89
REVISED	8-15-94
CHECKED	6-3-99
RESIZED	5-7-08
REVIEWED	5-17-13
REVISED	4-22-21
REVISED	10-21-21

MODEL: District Standards Sheet
FILE NAME: Y:\IDOT\1423-07_78399\78399 DESIGN\CADD\CAD_Sheets Common\D978399-sht-details02.dgn

ESCA CONSULTANTS, INC.

USER NAME = atn	DESIGNED - ATN	REVISED -	STATE OF ILLINOIS DEPARTMENT OF TRANSPORTATION
ESCA PROJECT NO. = 1423.07	DRAWN - ATN	REVISED -	
	CHECKED - ELH	REVISED -	
PLOT DATE = 2/25/2025	DATE - 01/25	REVISED -	

SEEDING AND MULCHING & STEP CONSTRUCTION ON EXISTING FILL

SCALE: N/A | SHEET 1 OF 1 SHEETS | STA. TO STA.

F.A.P. RTE.	SECTION	COUNTY	TOTAL SHEETS	SHEET NO.
132/869	1CR-1; 103CR-1; 103CR-2	SALINE	59	59

CONTRACT NO. 78399

ILLINOIS | FED. AID PROJECT