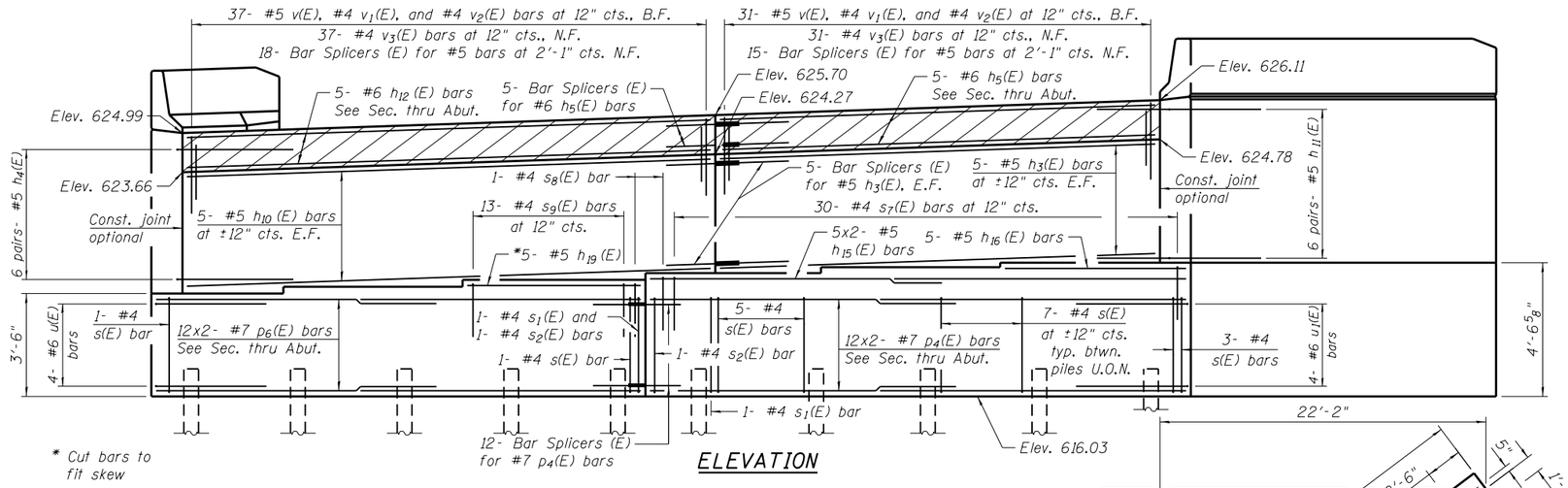

ELEVATION

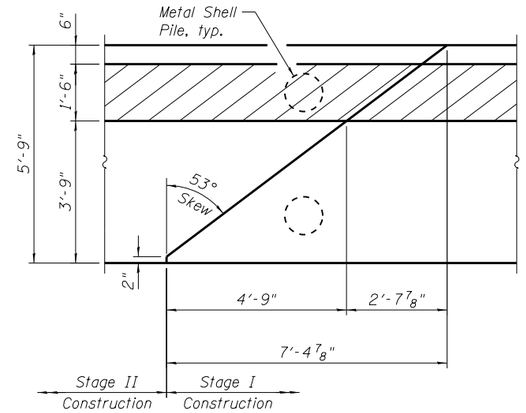

DETAIL 1

(Reinf. omitted for clarity)

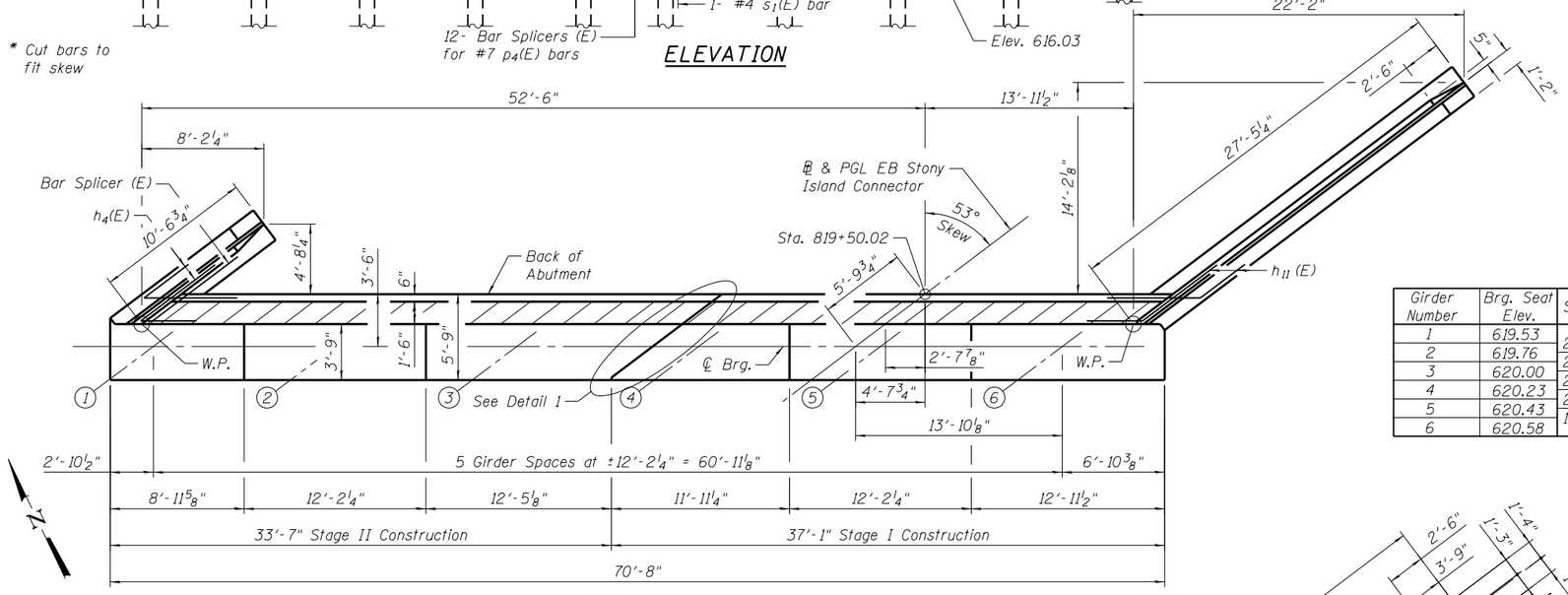

TOP VIEW

Girder Number	Brg. Seat Elev.	Step
1	619.53	2 3/4"
2	619.76	2 7/8"
3	620.00	2 7/8"
4	620.23	2 3/8"
5	620.43	1 7/8"
6	620.58	

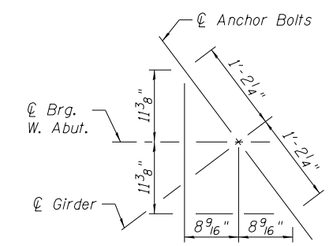

ANCHOR BOLT LAYOUT

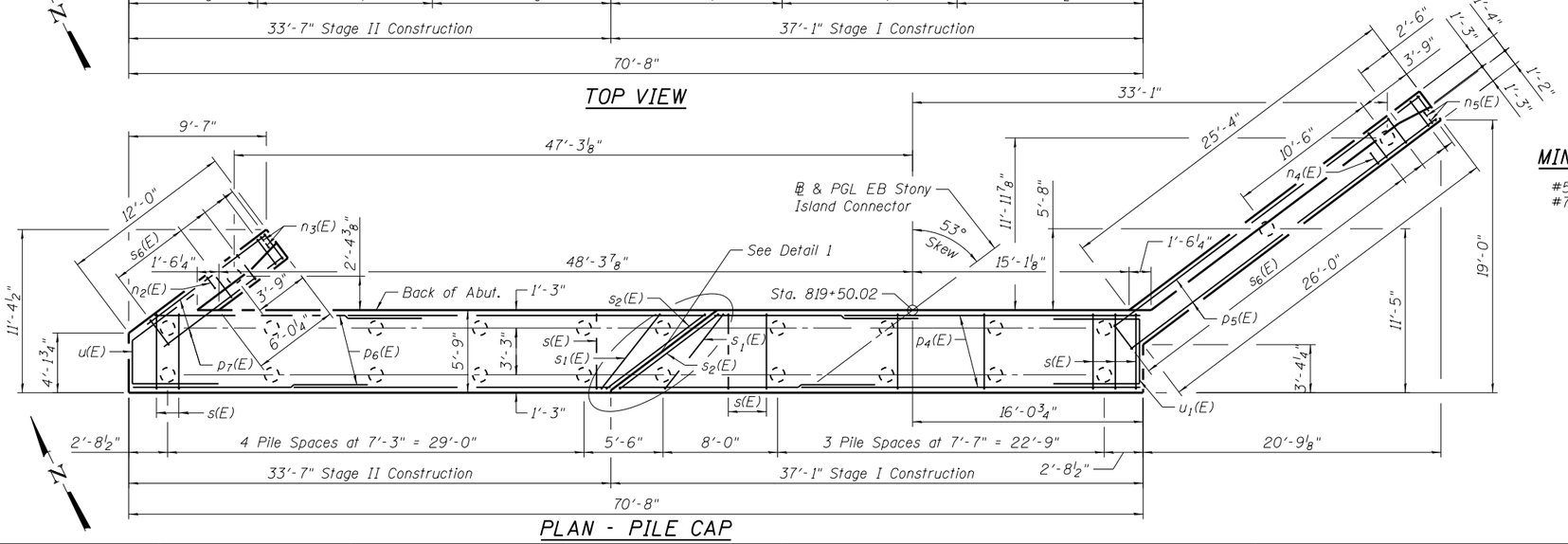

PLAN - PILE CAP

MIN. BAR LAP

#5 - 3'-3"
#7 - 5'-2"

Notes:

N.F. - denotes Near Face
B.F. - denotes Back Face
E.F. - denotes Each Face
U.O.N. - denotes Unless Otherwise Noted

Bars indicated thus 12x2-#7 etc. indicates 12 lines of bars with 2 lengths per line.

For Bill of Material and Bar Bending Details, see Sheet S-34.

For details of Bar Splicers, see sheet S-38.

For details of metal shell piles see sheet S-37.

Pile locations may be adjusted up to 6" (parallel to ℄ Brg.) from the locations shown herein in order to miss existing piles. All adjusted pile locations must be approved by the Engineer prior to driving.

PILE DATA

Type: Metal Shell - 12" ϕ with 0.250" walls
Nominal Required Bearing: 210 Kips
Factored Resistance Available: 115 Kips
Est. Length: 57'
No. Production Piles: 22
No. Test Piles: 1

BOWMAN, BARRETT & ASSOCIATES INC.
CONSULTING ENGINEERS
Chicago, Illinois
312.228.0100
www.bbandainc.com

USER NAME =	DESIGNED - TL	REVISED -
	CHECKED - BAK	REVISED -
PLOT SCALE =	DRAWN - TL	REVISED -
PLOT DATE = 03/29/2013	CHECKED - JGC	REVISED -

STATE OF ILLINOIS
DEPARTMENT OF TRANSPORTATION

EAST ABUTMENT PLAN AND ELEVATION
STRUCTURE NO. 016-2470

SHEET NO. S-32 OF S-53 SHEETS

F.A.I. RTE.	SECTION	COUNTY	TOTAL SHEETS	SHEET NO.
94	2012-059-BR	COOK	631	407
		CONTRACT NO. 60J12		
		ILLINOIS FED. AID PROJECT		

S:\1072\05.CADD\Structural\SN 0162470\CADD Sheets\0162470-60J12-032-EA01.dgn 3/29/2013 2:21:37 PM