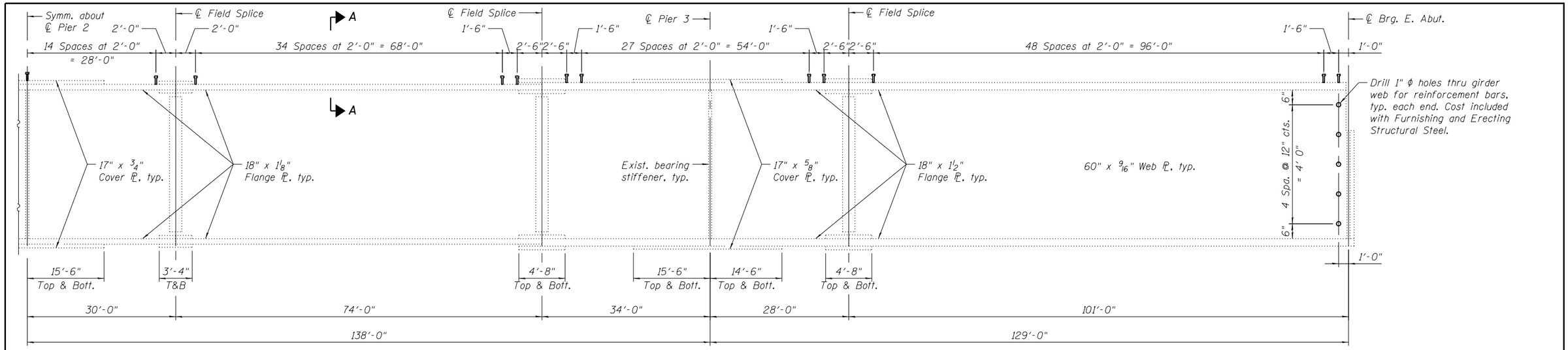

GIRDER ELEVATION

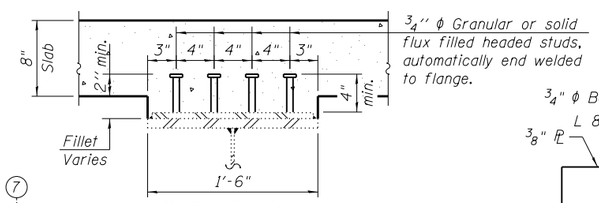

SECTION A-A

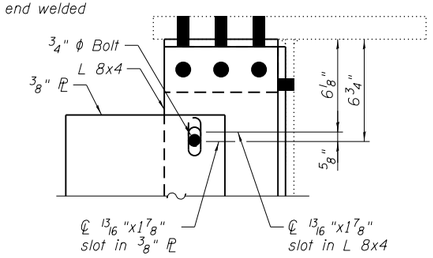

DETAIL 1 - INITIAL

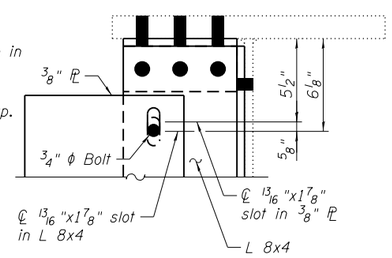

DETAIL 1 - FINAL

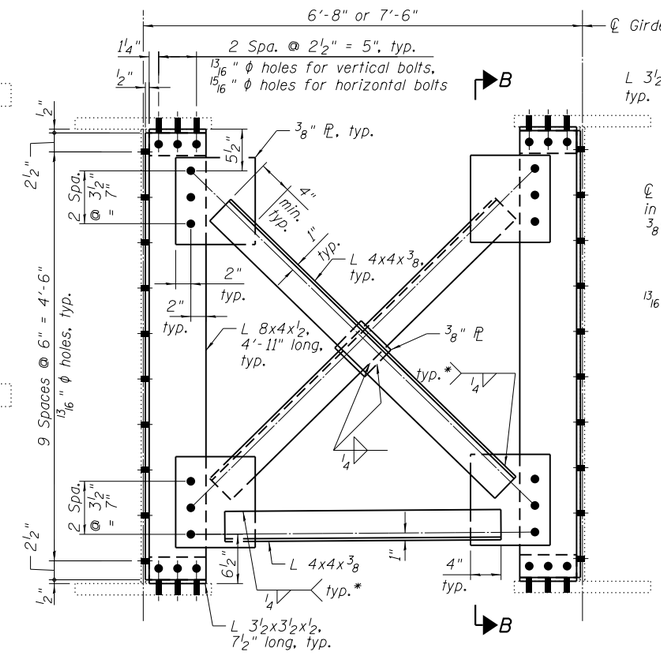

CROSS FRAME CF1 ELEVATION

(22 Required)

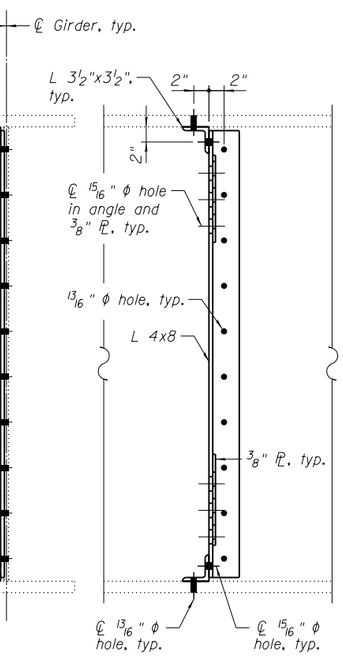

SECTION B-B

(Cross frame angles and bolts not shown for clarity)

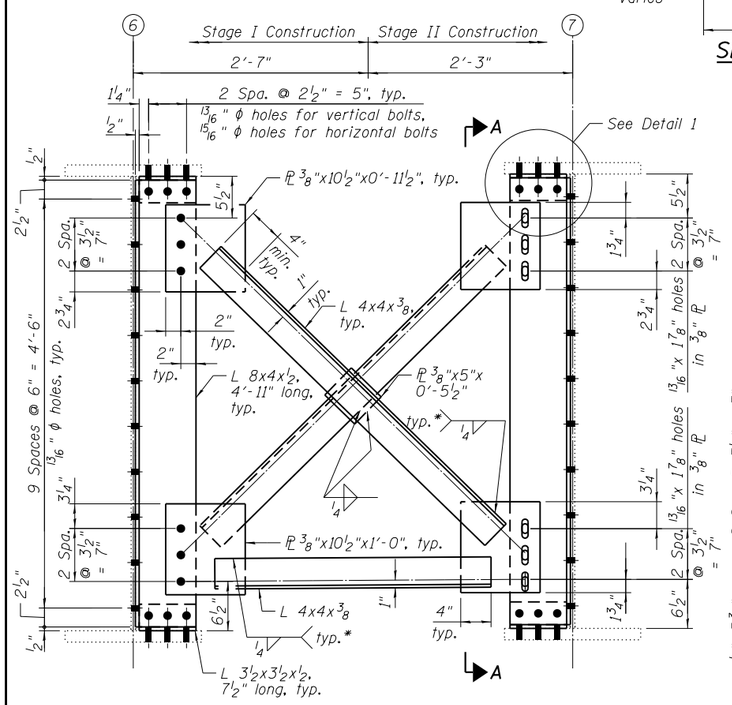

CROSS FRAME CF ELEVATION

(24 Required)
(Bolts in slotted holes not shown for clarity)

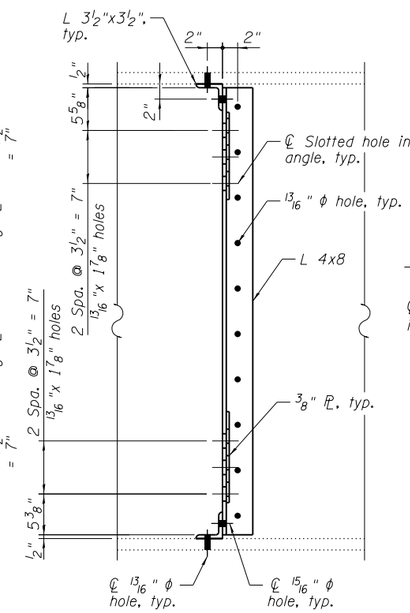

SECTION A-A

(Cross frame angles and bolts in slotted holes not shown for clarity)

Notes:

1. Adjust spacing of stud shear connectors so that stud is at least 1 1/2" clear from end of flange cover plates and cross frame connection bolts and washers.
2. Erect Cross Frames CF before Stage II deck pour, finger-tightening bolts connecting 3/8" plates to angles. Bolts shall be fully tightened after Stage II deck pour.
3. The Contractor shall field verify the elevations, locations, and dimensions of the girders at each proposed cross frame location before Stage I deck removal and adjust any dimensions shown herein as required before ordering any material.
4. The final configuration of Cross Frames CF, after Stage II deck pour, is shown unless noted otherwise.
5. Two hardened washers required for each set of 15/16" ϕ oversized and 13/16" x 1 7/8" slotted holes.
6. Two 3"x3"x5/16" plate washers required for each set of 13/16" x 1 7/8" slotted holes.

* Weld angles along 3 sides on one face of 3/8" PL.

BILL OF MATERIAL

ITEM	UNIT	QUANTITY
Stud Shear Connectors	Each	13,572
Structural Steel Removal	Pound	11,160

S:\1872\05-CADD\Structural\SN 0162440\CADD Sheets\0162440-60J12-025-SS01.dgn 4/18/2013 2:48:28 PM

BOWMAN, BARRETT & ASSOCIATES INC.
CONSULTING ENGINEERS
Chicago, Illinois
312.228.0100
www.bbandainc.com

USER NAME =	DESIGNED - TL	REVISED -
	CHECKED - BAK	REVISED -
PLOT SCALE =	DRAWN - TL	REVISED -
PLOT DATE = 03/29/2013	CHECKED - JGC	REVISED -

STATE OF ILLINOIS
DEPARTMENT OF TRANSPORTATION

STRUCTURAL STEEL DETAILS II
STRUCTURE NO. 016-2440

SHEET NO. S-26 OF S-47 SHEETS

F.A.I. RTE.	SECTION	COUNTY	TOTAL SHEETS	SHEET NO.
94	2012-059-BR	COOK	631	454

CONTRACT NO. 60J12

ILLINOIS FED. AID PROJECT