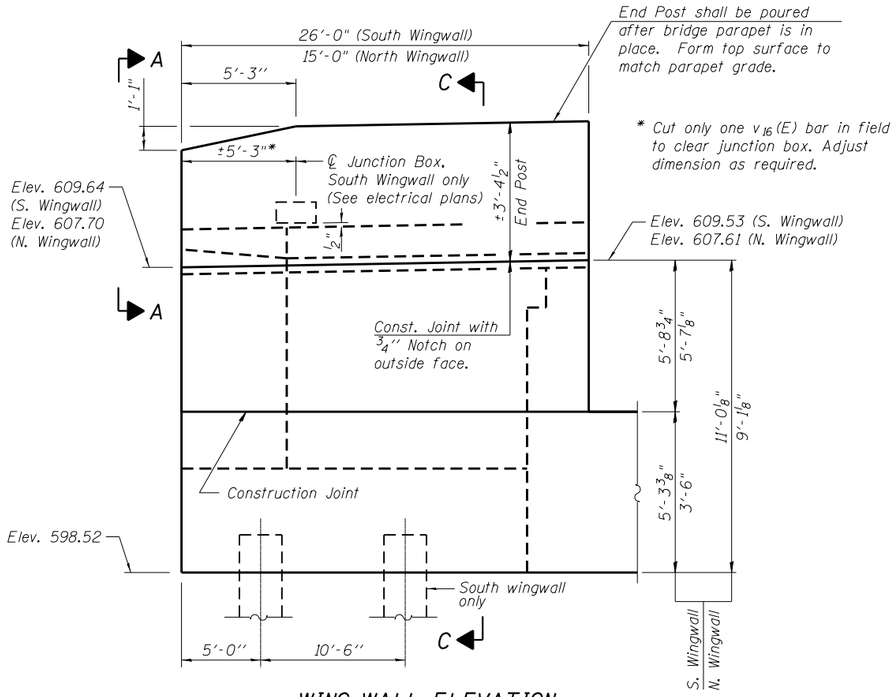

WING WALL ELEVATION
Showing Dimensions

* Cut only one v_{16} (E) bar in field to clear junction box. Adjust dimension as required.

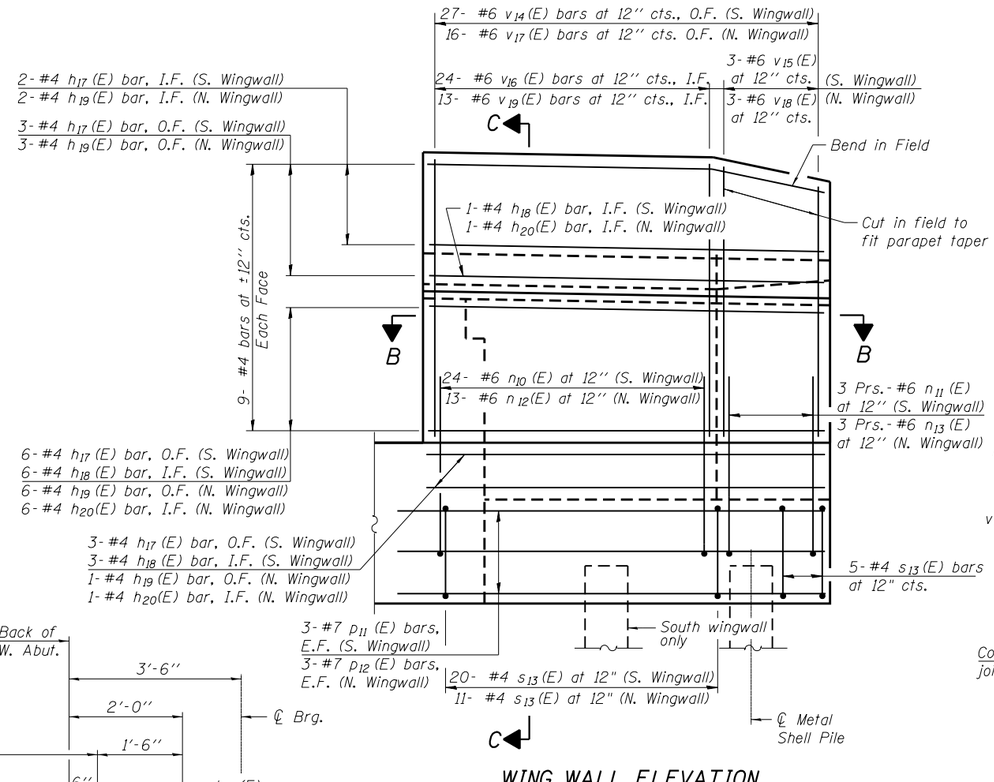

WING WALL ELEVATION
Showing Reinforcement

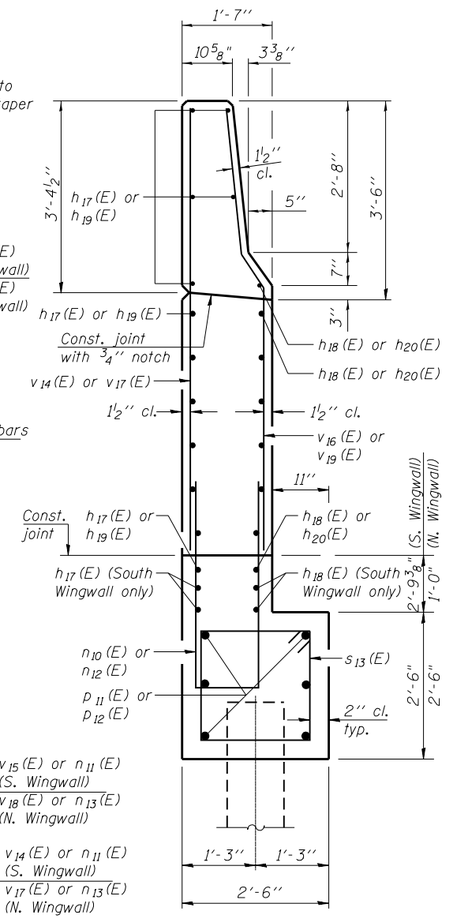

SECTION C-C

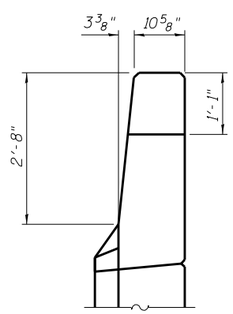

VIEW A-A

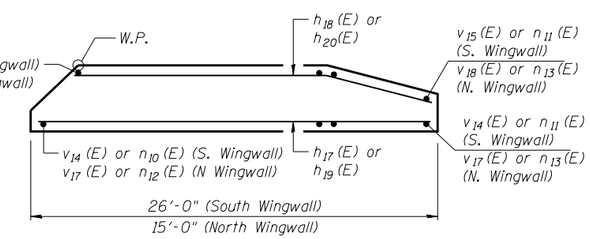

SECTION B-B

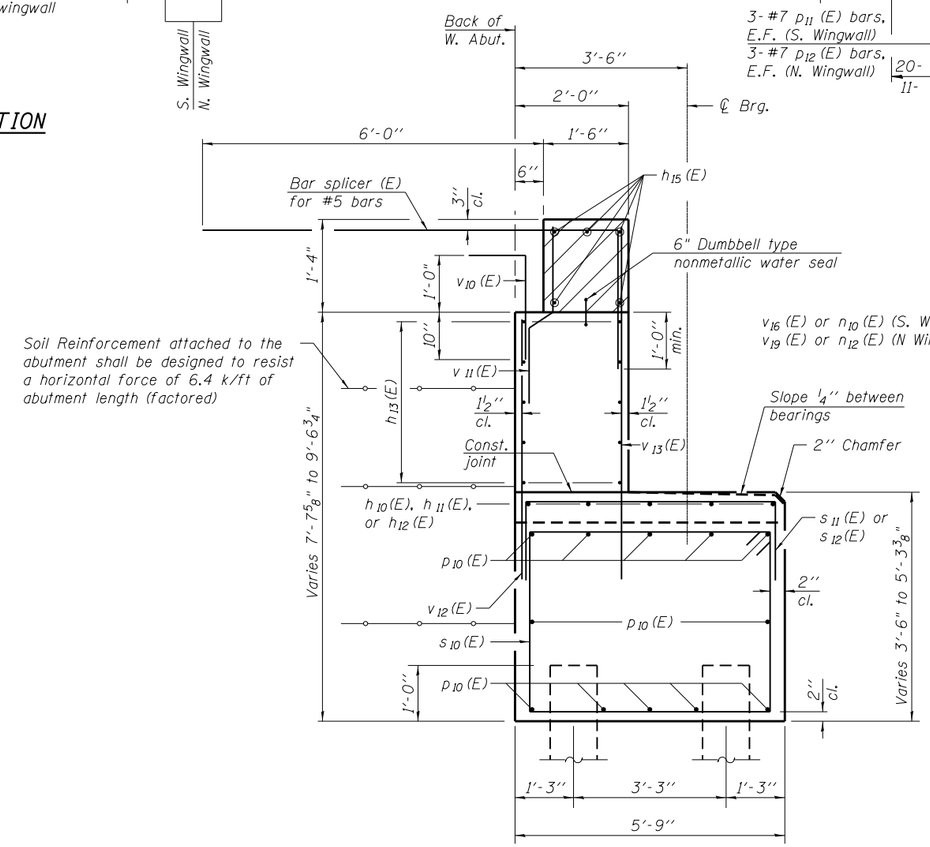

SEC. THRU ABUT.

Notes:
Hatched area to be poured after superstructure forms have been removed. Quantity of concrete included with Concrete Superstructure.
Space reinforcement in cap to miss anchor bolts.
Pour steps monolithically with cap.
Quantity of concrete in end post included with Concrete Superstructure on sheet S-13.
I.F. - denotes Inside Face
O.F. - denotes Outside Face

S:\1072\95_CADD\Structural\SN 0162471\CADD Sheets\0162471-60J12-032-WA02.dgn 4/30/2013 3:33:34 PM

BOWMAN, BARRETT & ASSOCIATES INC.
CONSULTING ENGINEERS
Chicago, Illinois
312.228.0100
www.bbandainc.com

USER NAME =	DESIGNED - TL	REVISED -	
	CHECKED - BAK	REVISED -	
PLOT SCALE =	DRAWN - TL	REVISED -	
PLOT DATE = 03/29/2013	CHECKED - BAK	REVISED -	

STATE OF ILLINOIS
DEPARTMENT OF TRANSPORTATION

WEST ABUTMENT SECTIONS AND DETAILS
STRUCTURE NO. 016-2471

SHEET NO. S-32 OF S-63 SHEETS

F.A.I. RTE.	SECTION	COUNTY	TOTAL SHEETS	SHEET NO.
94	2012-059-BR	COOK	631	525
		CONTRACT NO. 60J12		
		ILLINOIS FED. AID PROJECT		