Notes:
Pour steps monolithically with cap.
For details of Bar Splicers, see sheet S23 of S26.
For details of piles, see sheet S24 of S26.

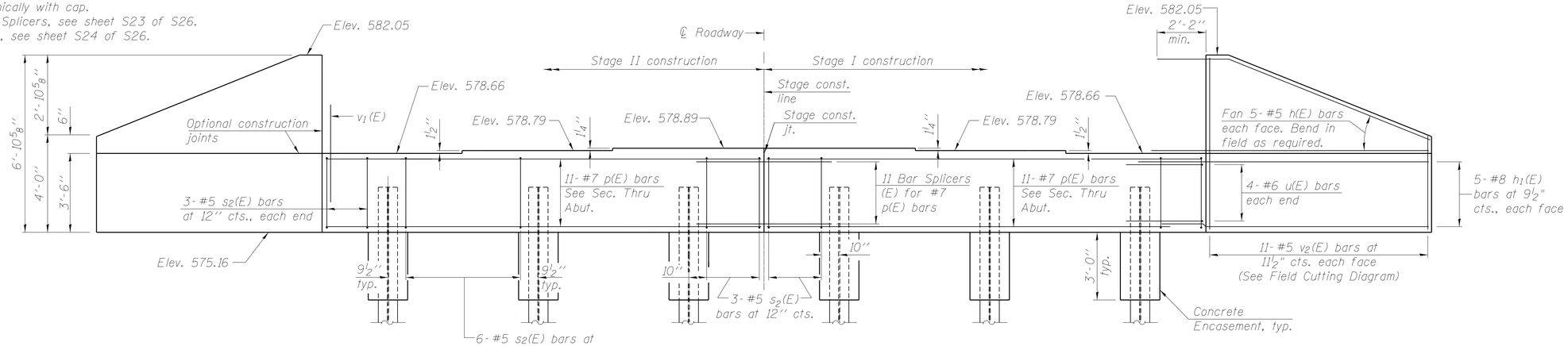

ELEVATION
(Looking east)

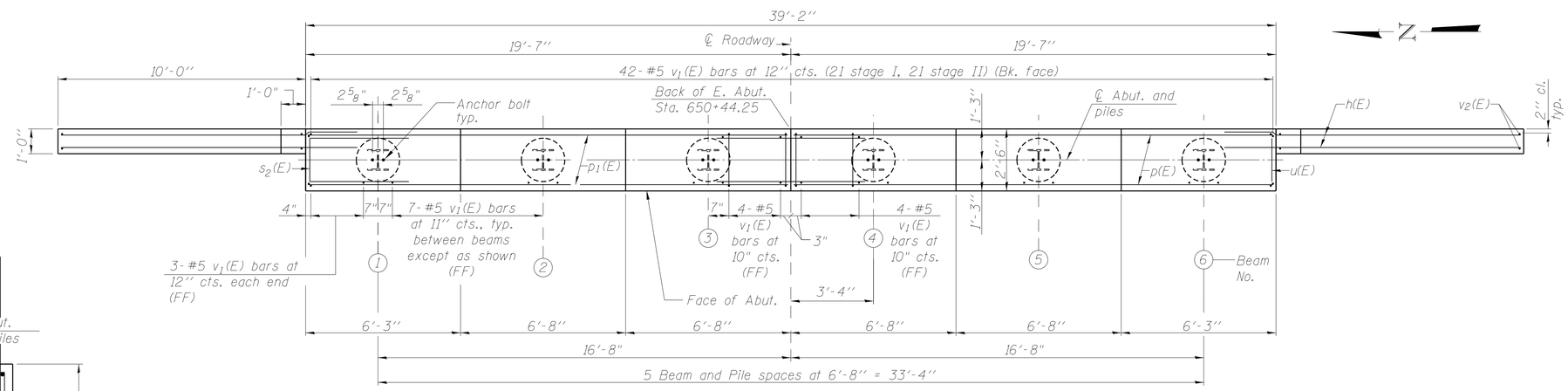

PLAN

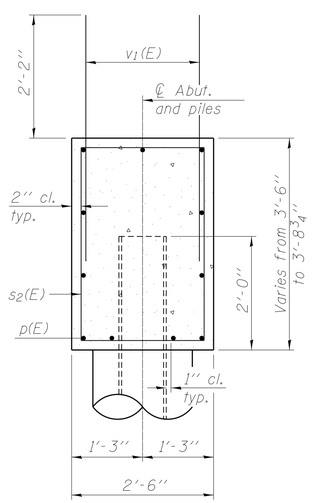

SEC. THRU ABUT.

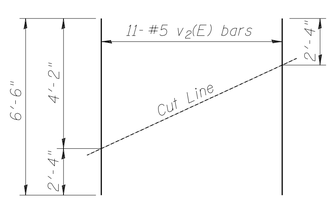

FIELD CUTTING DIAGRAM
Order $v_2(E)$ full length. Cut as shown and use remainder of bars in opposite face.

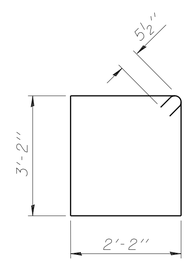

BAR $s_2(E)$

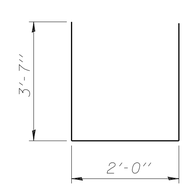

BAR u(E)

PILE DATA

Type:	Steel HP 12x53
Nominal Required Bearing:	210 kips
Allowable Resistance Available:	151 kips
Est. Length:	60 ft.
No. Production Piles:	5
No. Test Piles:	1

BILL OF MATERIAL

Bar	No.	Size	Length	Shape
h(E)	20	#5	12'-5"	
$h_1(E)$	20	#8	14'-3"	
p(E)	22	#7	19'-3"	
$s_2(E)$	36	#5	11'-7"	
u(E)	8	#6	9'-2"	
$v_1(E)$	84	#5	4'-4"	
$v_2(E)$	22	#5	6'-6"	
Structure Excavation			Cu. Yd.	132
Concrete Structures			Cu. Yd.	17.7
Reinforcement Bars, Epoxy Coated			Pound	2960
Furnishing Steel Piles HP 12x53			Foot	300
Driving Piles			Foot	300
Test Pile Steel HP 12x53			Each	1
Concrete Encasement			Cu. Yd.	2.1