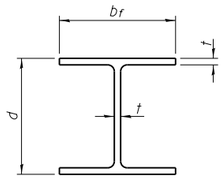

STEEL PILE TABLE

Designation	Depth d	Flange width b_f	Web and Flange thickness t	Encasement diameter A
HP 14x117	14 1/4"	14 7/8"	13/16"	30"
x102	14"	14 3/4"	11/16"	30"
x89	13 7/8"	14 3/4"	5/8"	30"
x73	13 5/8"	14 5/8"	1/2"	30"
HP 12x84	12 1/4"	12 1/4"	11/16"	24"
x74	12 1/8"	12 1/4"	5/8"	24"
x63	12"	12 1/8"	1/2"	24"
x53	11 3/4"	12"	7/16"	24"
HP 10x57	10"	10 1/4"	9/16"	24"
x42	9 3/4"	10 1/8"	7/16"	24"
HP 8x36	8"	8 1/8"	7/16"	18"

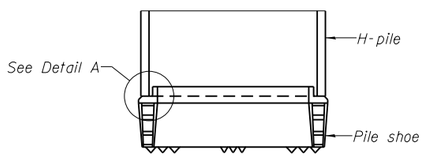

ELEVATION

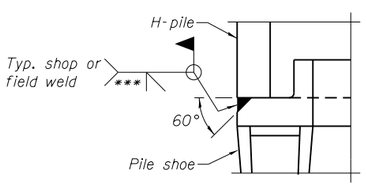

DETAIL A

H-PILE SHOE ATTACHMENT

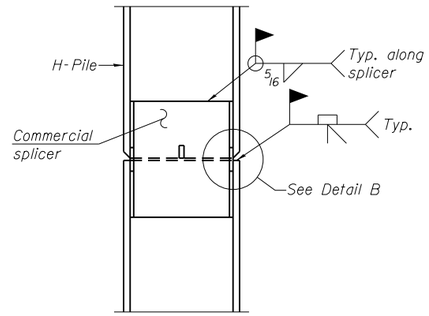

ELEVATION

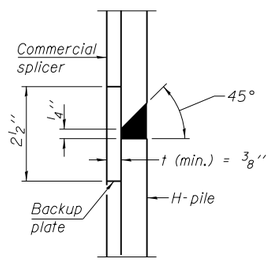

DETAIL "B"

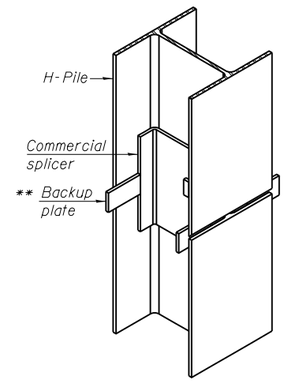

ISOMETRIC VIEW

WELDED COMMERCIAL SPLICE

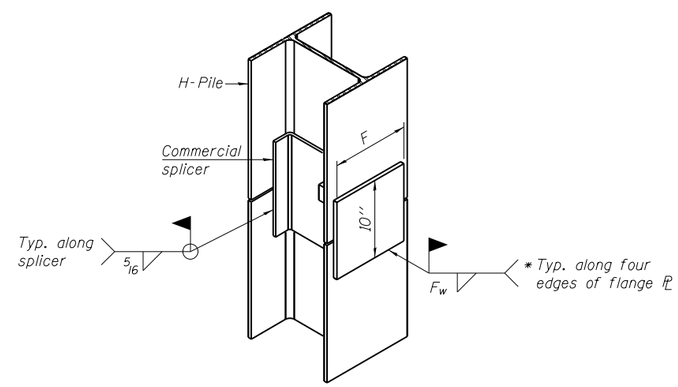

ISOMETRIC VIEW

WELDED COMMERCIAL SPLICE ALTERNATE

* Interrupt welds 1/4" from end of web and/or each flange.

** Remove portions of backup plates that extend outside the flanges.

*** Weld size per pile shoe manufacturer (5/16" min.).

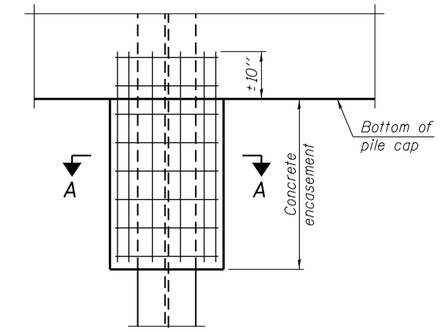

ELEVATION

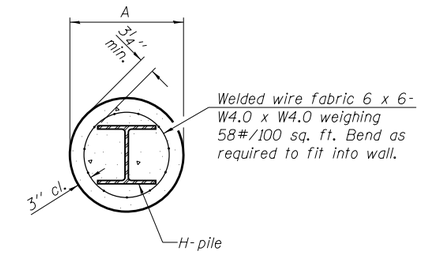

Note:
Forms for encasement may be omitted when soil conditions permit.

SECTION A-A

PILE ENCASEMENT

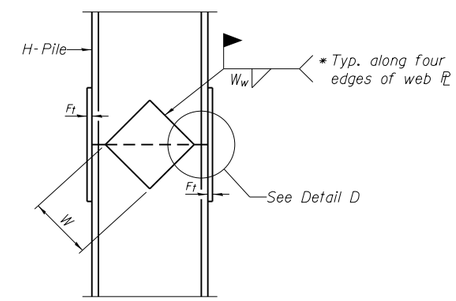

ELEVATION

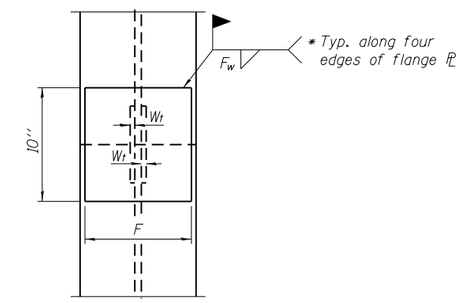

END VIEW

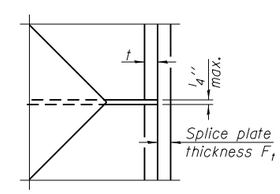

DETAIL D

Designation	F	F_t	F_w	W	W_t	W_w
HP 14x117	12 1/2"	1"	7/8"	7 3/4"	5/8"	1/2"
x102	12 1/2"	7/8"	3/4"	7 3/4"	5/8"	1/2"
x89	12 1/2"	3/4"	11/16"	7 3/4"	5/8"	1/2"
x73	12 1/2"	5/8"	9/16"	7 3/4"	5/8"	1/2"
HP 12x84	10"	7/8"	11/16"	6 1/2"	5/8"	1/2"
x74	10"	7/8"	11/16"	6 1/2"	5/8"	1/2"
x63	10"	5/8"	1/2"	6 1/2"	1/2"	3/8"
x53	10"	5/8"	1/2"	6 1/2"	1/2"	3/8"
HP 10x57	8"	3/4"	9/16"	5 1/4"	1/2"	3/8"
x42	8"	5/8"	9/16"	5 1/4"	1/2"	3/8"
HP 8x36	7"	5/8"	7/16"	4 1/4"	1/2"	3/8"

WELDED PLATE FIELD SPLICE

Note:
The steel H-piles shall be according to AASHTO M270 Grade 50.

F-HP 1-27-12

TERRA ENGINEERING LTD.
225 W. OHIO ST., FOURTH FL.
CHICAGO, IL 60654
W(312)467-0123 F(312)467-0220
www.terraengineering.com

USER NAME = cvm	DESIGNED - OY	REVISED -
FILE NAME = D468757-024-Pile.dgn	CHECKED - DA	REVISED -
PLOT SCALE = 1.6667 ' / in.	DRAWN - CM	REVISED -
PLOT DATE = 1/21/2013	CHECKED - JB	REVISED -

STATE OF ILLINOIS
DEPARTMENT OF TRANSPORTATION

PILE DETAILS
STRUCTURE NO. 090 - 0178

SHEET NO. S24 OF S26 SHEETS

F.A. RTE.	SECTION	COUNTY	TOTAL SHEETS	SHEET NO.
693	(119BR) BR	TAZEWELL	80	64

CONTRACT NO. 68757

ILLINOIS FED. AID PROJECT

M:\IL RT 9 OVER MUD CREEK\CIVIL\CADD Sheets\Structural\Final Plans\SHT\D468757-024-Pile.dgn