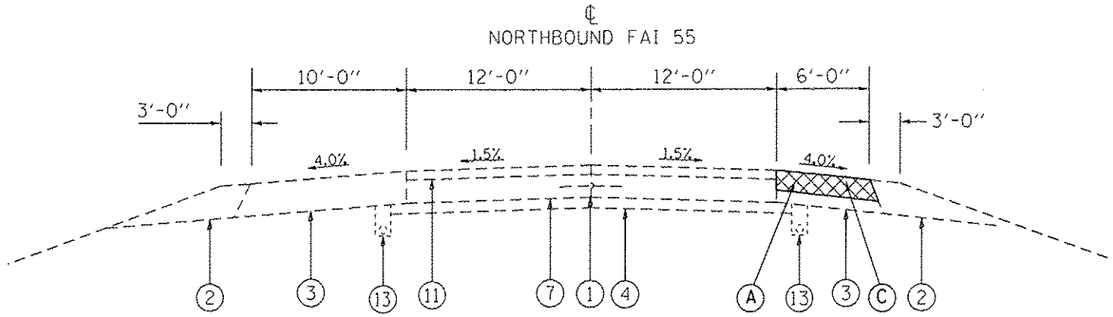

TYPICAL SECTION

STA. 1847+34.00 TO STA. 1850+19.00
(LOOKING SOUTH)

EXISTING LEGEND

1. EX LONGITUDINAL JOINT
2. EX AGGREGATE SHOULDERS
3. EX BITUMINOUS SHOULDERS
4. EX STABILIZED SUBBASE 4"
5. EX SRC PAVEMENT 8"
6. EX SRC PAVEMENT 9"
7. EX CRC PAVEMENT 9"
8. EX BURIED PCC PAVEMNET 10"
9. EX BITUMINOUS CONCRETE 2 3/4"
10. EX BITUMINOUS CONCRETE 3 1/2 "
11. EX BITUMINOUS CONCRETE 5"
12. EX PIPE UNDERDRAINS 4"
13. EX PIPE UNDERDRAINS 6"
14. EX COMBINATION CONCRETE CURB AND GUTTER, TYPE B-6.24
15. EX SRC PAVEMENT 10"

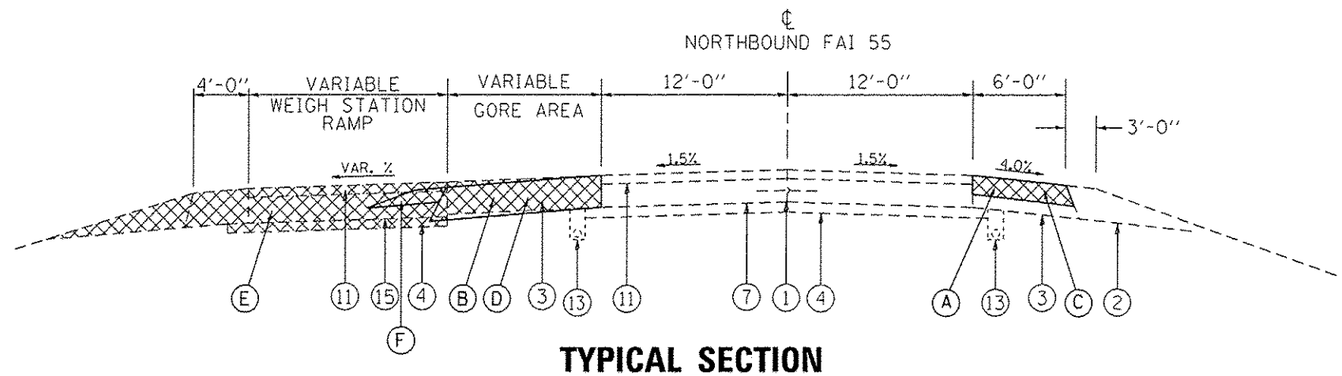

TYPICAL SECTION

STA. 1850+93.43 STA. 1853+17.85
(LOOKING SOUTH)

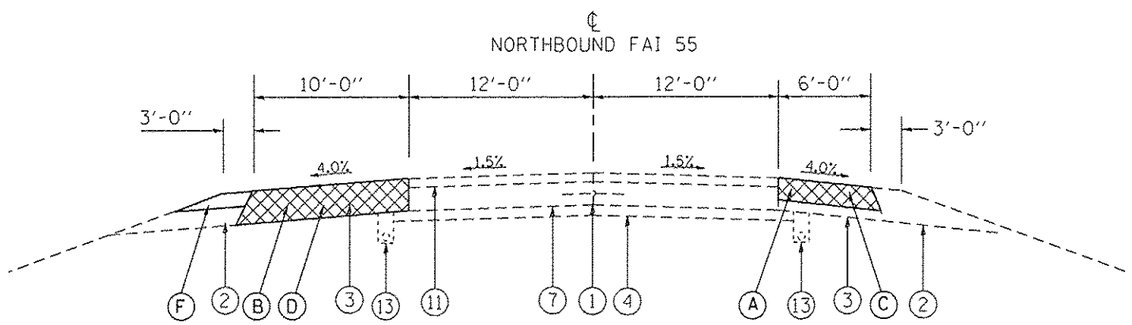

TYPICAL SECTION

STA. 1850+19.00 TO STA. 1850+93.43
STA. 1855+59.88 TO STA. 1859+60.06
(LOOKING SOUTH)

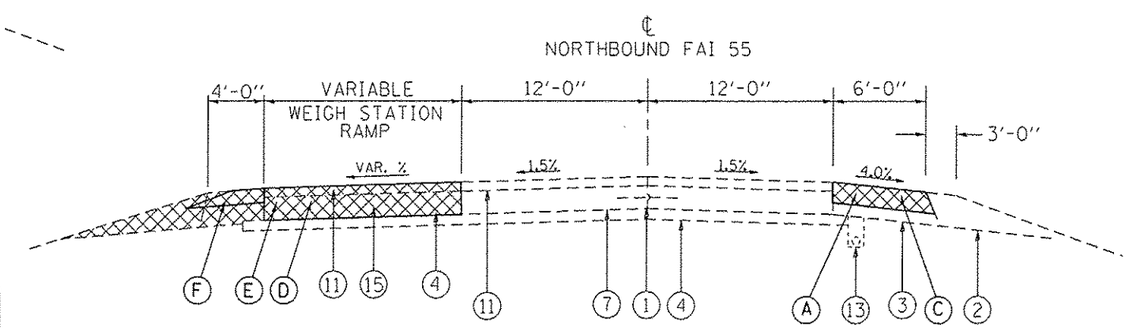

TYPICAL SECTION

STA. 1853+17.85 STA. 1855+59.88
(LOOKING SOUTH)

PROPOSED LEGEND

- (A) HMA SHOULDER REMOVAL, 10"
- (B) PAVED SHOULDER REMOVAL
- (C) HMA SHOULDERS, 10"
- (D) HMA SHOULDERS, 12"
- (E) PAVEMENT REMOVAL
- (F) AGGREGATE SHOULDER, TYPE B

FILE NAME = c:\pw_work\pwidot\sparkagw\d0216368\D672505-sht-typicals_ws.dgn	USER NAME = sparkagw	DESIGNED - RTS	REVISED -
		DRAWN - RTS	REVISED -
	PLOT SCALE = 14.0000 ' / in.	CHECKED -	REVISED -
	PLOT DATE = May-10-2013 02:42:18PM	DATE - 04-10-13	REVISED -

STATE OF ILLINOIS
DEPARTMENT OF TRANSPORTATION

PROPOSED TYPICAL SECTION
WEIGH STATION ROAD

SCALE: | SHEET 5 OF 5 SHEETS | STA. TO STA.

F.A.I. RTE.	SECTION	COUNTY	TOTAL SHEETS	SHEET NO.
55	68-2WS-2	MONTGOMERY	124	15A
		CONTRACT NO. 72505		
		ILLINOIS FED. AID PROJECT		