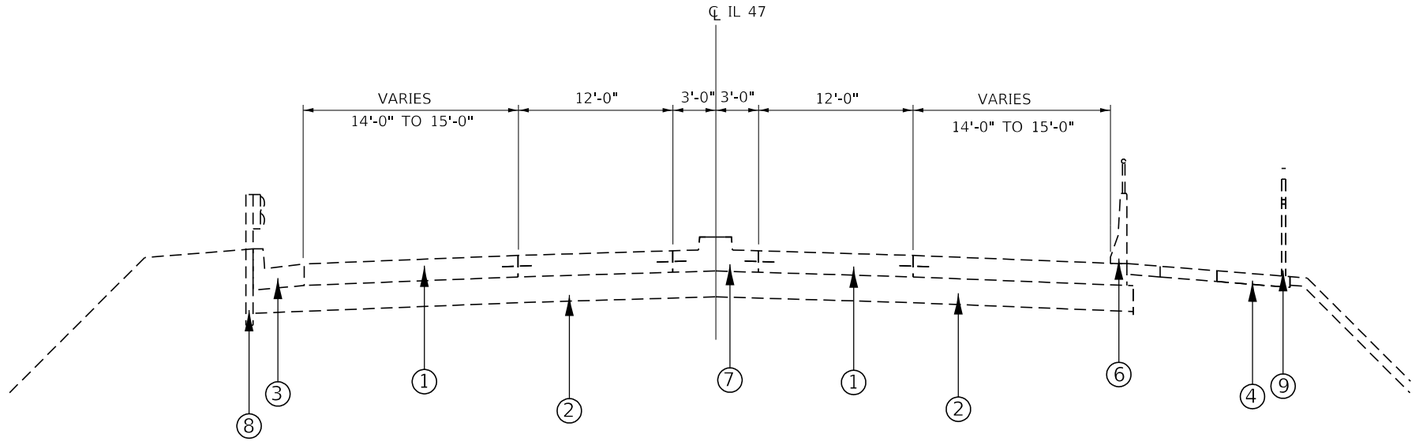

TYPICAL SECTION 1

STA. 166+24 TO STA. 166+48

* END OF S. APPROACH = STA. 166+48

LEGEND

1 PORTLAND CEMENT CONCRETE PAVEMENT 10" (JOINTED)
2 SUB-BASE GRANULAR MATERIAL, TYPE A 12"
3 COMBINATION CONCRETE CURB AND GUTTER, TYPE B-6.24
4 PORTLAND CEMENT CONCRETE SIDEWALK 4"
5 PORTLAND CEMENT CONCRETE SIDWALK 8"
6 CONCRETE BARRIER
7 CONCRETE MEDIAN, TYPE SB-6.24
8 STEEL PLATE BEAM GUARDRAIL, TYPE A
9 BICYCLING RAILING

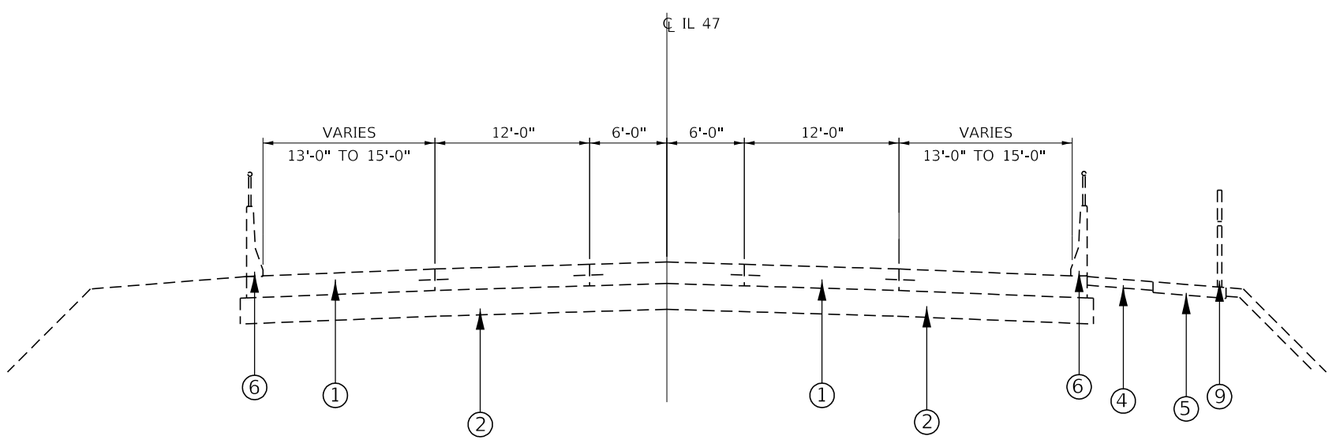

TYPICAL SECTION 2

STA. 184+38 TO STA. 185+08

**END OF N. APPROACH = STA. 184+38

MODEL: Default
FILE NAME: pw:\\planroom.dot.illinois.gov:PWIDOT\Documents\IDOT Offices\District 3\Projects\D3366K10\CADData\66K10-details.dgn

USER NAME = woodshankrl	DESIGNED - ECP	REVISED - _____	STATE OF ILLINOIS DEPARTMENT OF TRANSPORTATION
	DRAWN - ECP	REVISED - _____	
PLOT SCALE = 100.0000 ' / in.	CHECKED - RW	REVISED - _____	
PLOT DATE = 3/18/2019	DATE - 1/29/19	REVISED - _____	

TYPICAL SECTIONS - LOCATION 1
SN 032-0099

SCALE: _____ SHEET 1 OF 1 SHEETS STA. _____ TO STA. _____

F.A. RTE.	SECTION	COUNTY	TOTAL SHEETS	SHEET NO.
VAR.	D3 BRIDGE WASHING 2019-1	GRUNDY/LASALLE	30	4
		CONTRACT NO. 66K10		
		ILLINOIS	FED. AID PROJECT	