CONTRACT NO. 60B46

F.A.I. RTE.	SECTION	COUNTY	TOTAL SHEETS	SHEET NO.
55	99 (1&2) WRS	WILL	228	53G
FED. ROAD DIST. NO.	ILLINOIS	FED. AID PROJECT		

PARAPET OR WINGWALL

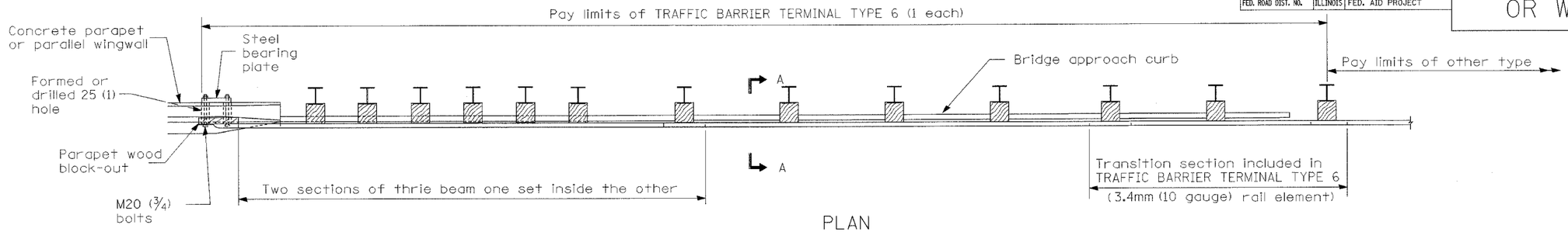

PLAN

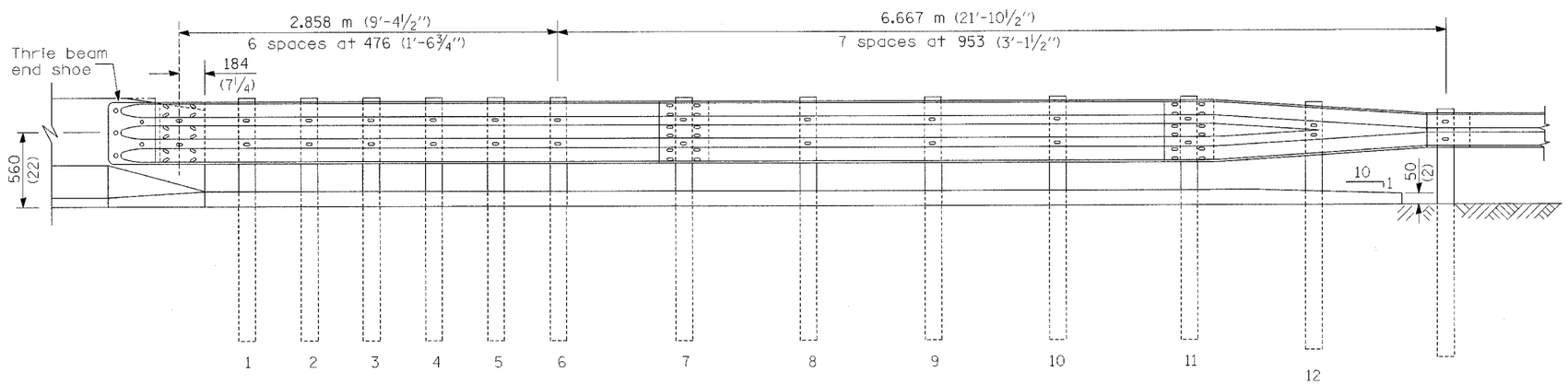

ELEVATION

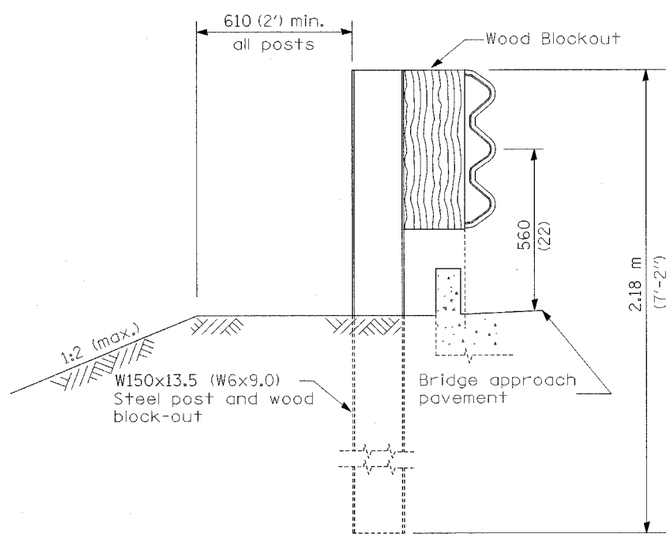

SECTION A-A

GENERAL NOTES

See Standard 630001 for details of guardrail not shown.

Thrie beam rail shall be bolted to block-out at all posts.

See Standard 420401 for details of bridge approach pavement.

All slope ratios are expressed as units of vertical displacement to units of horizontal displacement (V:H).

All dimensions are in millimeters (inches) unless otherwise shown.

TRAFFIC BARRIER TERMINAL, TYPE 6

Sheet 1 of 3

ROADWAY DETAILS