CONTRACT NO. 62895

F.A.I. RTE.	SECTION	COUNTY	TOTAL SHEETS	SHEET NO.
55	99 (1&2) WRS	WILL	334	219
STA.		TO STA.		
FED. ROAD DIST. NO.	ILLINOIS	FED. AID PROJECT		

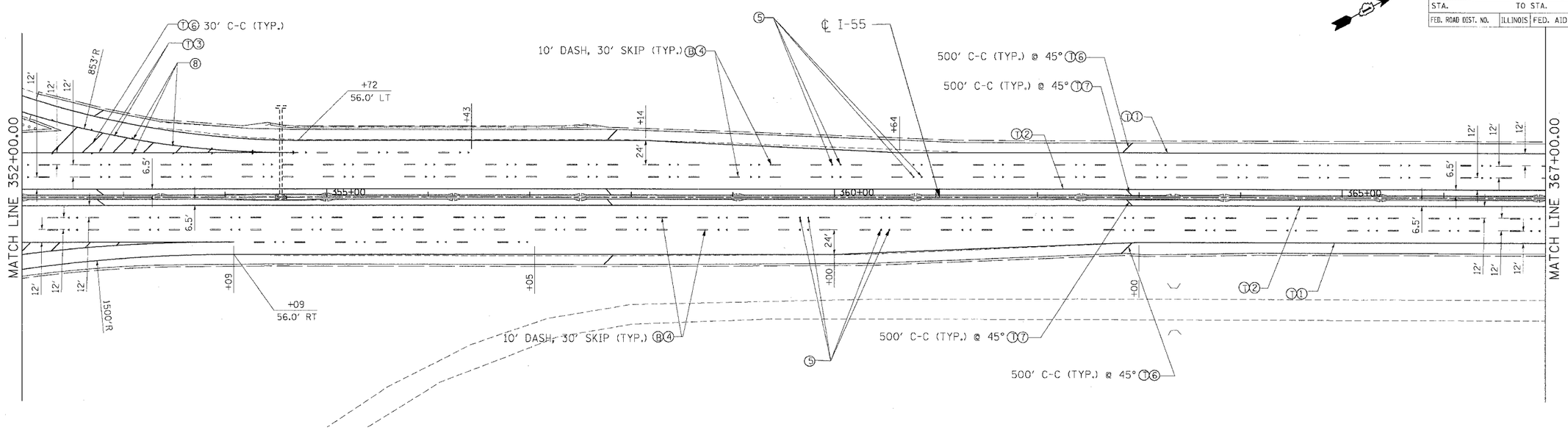

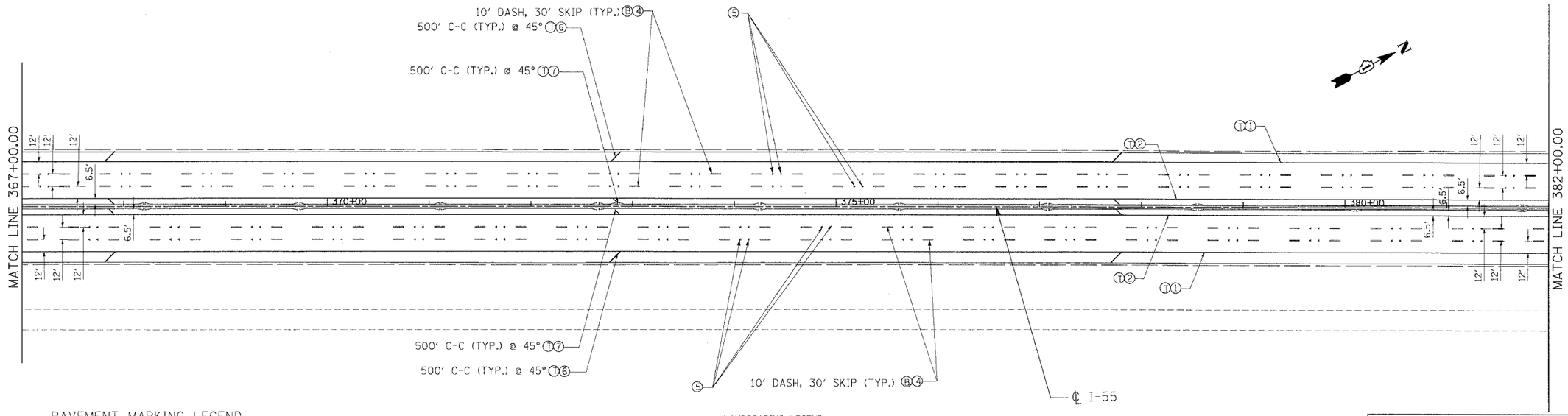

PAVEMENT MARKING LEGEND

1. PAVEMENT MARKING LINE 4" (WHITE)
2. PAVEMENT MARKING LINE 4" (YELLOW)
3. PAVEMENT MARKING LINE 8" (WHITE)
4. PAVEMENT MARKING LINE 5" (WHITE)
5. RAISED REFLECTIVE PAVEMENT MARKER (DOUBLE, ONE-WAY, CRYSTAL MARKERS @ 80' C-C)
6. PAVEMENT MARKING LINE 12" (WHITE)
7. PAVEMENT MARKING LINE 12" (YELLOW)
8. RAISED REFLECTIVE PAVEMENT MARKER (SINGLE, ONE-WAY, CRYSTAL MARKERS @ 40' C-C)
9. RAISED REFLECTIVE PAVEMENT MARKER (SINGLE, ONE-WAY, CRYSTAL MARKERS @ 45' C-C)

T THERMOPLASTIC (EXTRUDED)

P POLYUREA

B PREFORMED PLASTIC, TYPE B

LANDSCAPING LEGEND

SEEDING CLASS 2A WITH TOPSOIL FURNISH AND PLACE, 6" AND EROSION CONTROL BLANKET

SEEDING CLASS 4 WITH COMPOST FURNISH AND PLACE, 4" AND EROSION CONTROL BLANKET

SEEDING, CLASS 4B (MODIFIED) WITH COMPOST FURNISH AND PLACE, 4" AND MULCH METHOD 2

REVISIONS	
NAME	DATE

MORCOM, N.V., INC.
CONSULTING ENGINEERS
CHICAGO, ILLINOIS

ILLINOIS DEPARTMENT OF TRANSPORTATION
FAI ROUTE 55 (I-80 TO BLACK ROAD)
WIDENING AND RESURFACING

PAVEMENT MARKING AND LANDSCAPING
FAI 55
STA. 352+00.00 TO STA. 382+00.00

SCALE: 1"=50'
DRAWN BY MW
DATE 03/15/07
CHECKED BY DDH

TENG
TENG & ASSOCIATES, INC.
ENGINEERS/ARCHITECTS/PLANNERS
CHICAGO, ILLINOIS

PLOT DATE = $DATE$
FILE NAME = $FILEL$
PLOT SCALE = $SCALE$
USER NAME = $USER$

..\VL99\A001.DGN, ..\VR001A023.DGN, ..\RW99\A001.DGN, ..\MT001A001.DGN, ..\PL001A001.DGN, ..\MT001A002.DGN, ..\PM001A001.DGN, ..\PL001A002.DGN, ..\PM001A002.DGN, ..\PL001A003.DGN, ..\PM001A003.DGN, ..\PL001A004.DGN, ..\PL001A005.DGN, ..\PL001A006.DGN, ..\PL001A007.DGN, ..\PL001A008.DGN, ..\PL001A009.DGN, ..\PL001A010.DGN, ..\PL001A011.DGN, ..\PL001A012.DGN, ..\PL001A013.DGN, ..\PL001A014.DGN, ..\PL001A015.DGN, ..\PL001A016.DGN, ..\PL001A017.DGN, ..\PL001A018.DGN, ..\PL001A019.DGN, ..\PL001A020.DGN, ..\PL001A021.DGN, ..\PL001A022.DGN, ..\PL001A023.DGN, ..\PL001A024.DGN, ..\PL001A025.DGN, ..\PL001A026.DGN, ..\PL001A027.DGN, ..\PL001A028.DGN, ..\PL001A029.DGN, ..\PL001A030.DGN, ..\PL001A031.DGN, ..\PL001A032.DGN, ..\PL001A033.DGN, ..\PL001A034.DGN, ..\PL001A035.DGN, ..\PL001A036.DGN, ..\PL001A037.DGN, ..\PL001A038.DGN, ..\PL001A039.DGN, ..\PL001A040.DGN, ..\PL001A041.DGN, ..\PL001A042.DGN, ..\PL001A043.DGN,