CONTRACT NO. 62B96

F.A.P. RTE.	SECTION	COUNTY	TOTAL SHEETS	SHEET NO.
55	100 (1&2) I-9	WILL	227	132
STA.		TO STA.		
FED. ROAD DIST. NO.	ILLINOIS	FED. AID PROJECT		
		DETLS-24 OF 27		

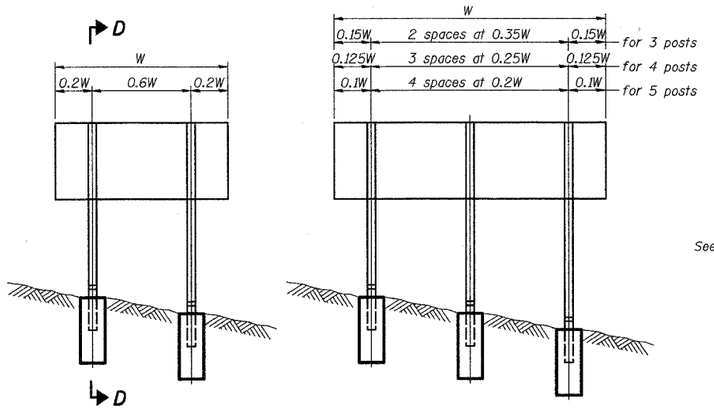

ELEVATION

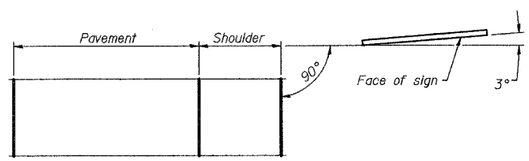

LOCATION SKETCH

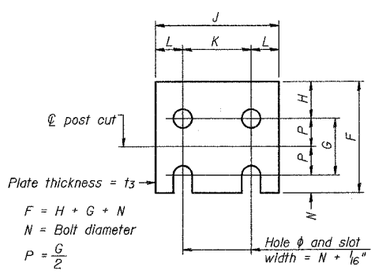

FUSE PLATE DETAIL

(Install with notches down.)

FUSE PLATE DATA		
N = Bolt Diameter	G	H
1/2"	2"	1 1/8"
5/8"	2 1/4"	1 1/4"
3/4"	2 1/2"	1 3/8"
7/8"	2 3/4"	1 1/2"
1"	3"	1 5/8"
1 1/8"	3 1/4"	1 3/4"

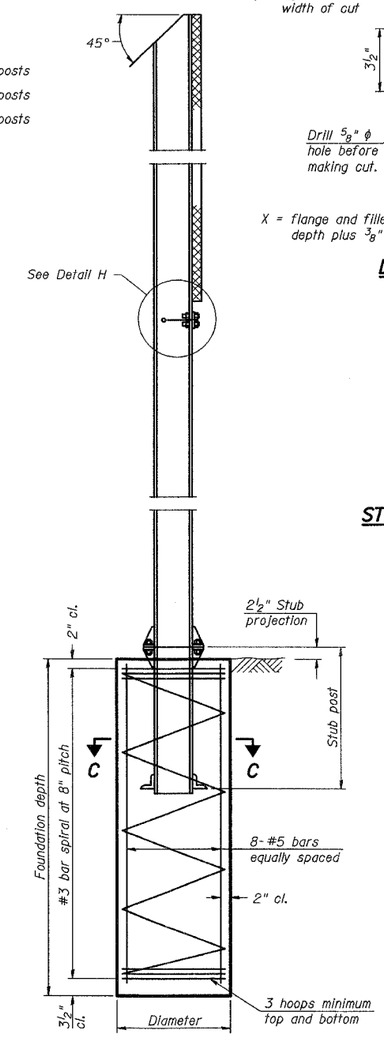

SECTION D-D

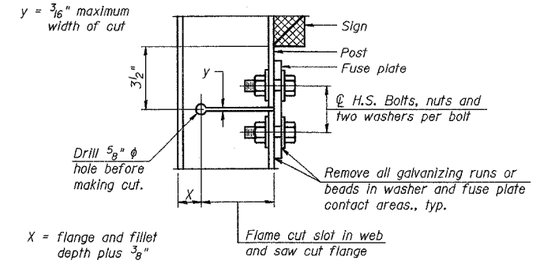

DETAIL H

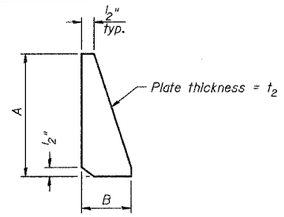

STIFFENER PLATE DETAIL

(See table for dimensions.)

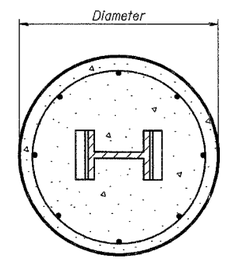

SECTION C-C

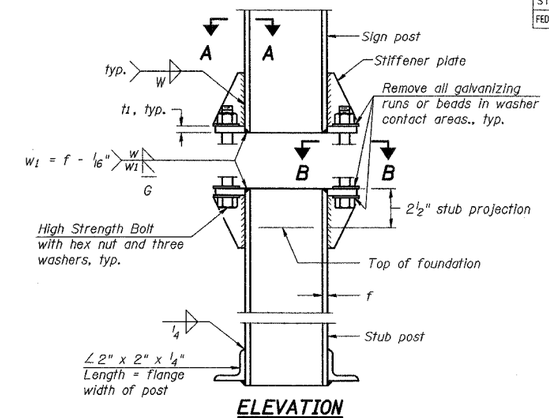

ELEVATION
SIGN POST & STUB POST

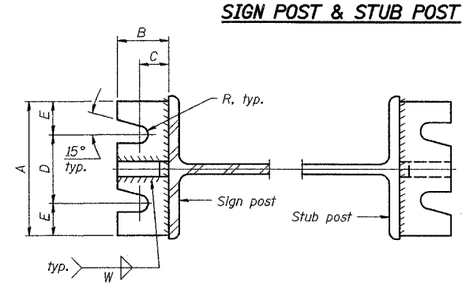

SECTION A-A

SECTION B-B

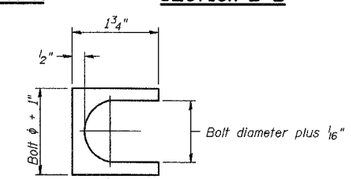

SHIM DETAIL

Furnish two 0.01" thick and two 0.03" thick stainless steel or brass (ASTM B36) shims per post.

GENERAL NOTES

Posts shall be plumbed by using shims with post-to-stub post connection bolts snug tight only. Final tightening of all High Strength Bolts shall be in accordance with Article 505.04(f)(3), and threads at the junction of the bolt and nut shall be burred or center punched to prevent the nut from loosening.

LOADING: 80 m.p.h. wind with 30% gust factor, normal to sign.

DESIGN STRESSES:
Structural steel - 20,000 p.s.i.
Reinforcing steel - 20,000 p.s.i.
Concrete - 1,400 p.s.i.
Footing soil pressure - 2,000 p.s.f.

After fabrication, the post, fuse plate and upper 6", min. of the stub post shall be hot-dip galvanized in accordance with AASHTO M111. All bolts, nuts and washers shall be hot-dip galvanized in accordance with AASHTO M232.

Work this sheet with Base Sheet BAW-A-2.

NUMBER	REVISION	DATE

BAW-A-1 1-7-05

DAVID MASON & ASSOCIATES
Civil Engineering
Structural Engineering
Surveying
445 E. Illinois, Suite 640
Chicago, IL 60611
(312) 945-9600

PARSONS BRINCKERHOFF

REVISIONS	
NAME	DATE

ILLINOIS DEPARTMENT OF TRANSPORTATION
F.A.I. I-55
US RTE. 30 TO 143rd STREET

BREAK-AWAY WIDE FLANGE
STEEL SIGN POST DETAILS

SCALE:
DATE: FEBRUARY 23, 2007
DRAWN BY: JS, LC
CHECKED BY: SE

FINAL

2/16/2007 8:58:30 AM