CONTRACT NO. 70626

F.A.I. RTE.	SECTION	COUNTY	TOTAL SHEETS	SHEET NO.
55	57(RA-L)	MCLEAN	12	8

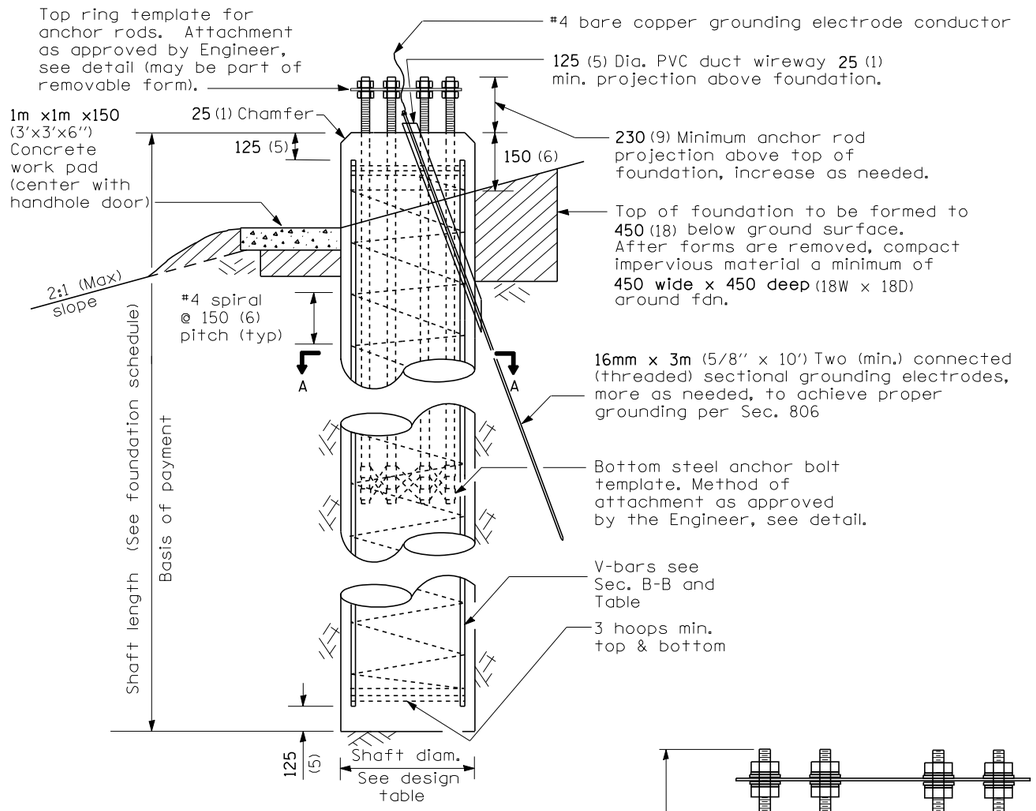

FOUNDATION ELEVATION

FOUNDATION SCHEDULE			
TOWER NUMBER	STATION	OFFSET	SHAFT LENGTH

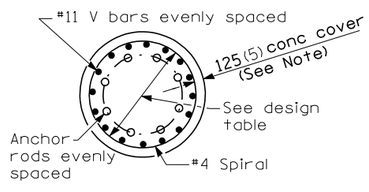

SECTION A-A

ANCHOR ROD & SHAFT REINFORCEMENT DESIGN TABLE (METRIC)					
TOWER HEIGHT	ANCHOR ROD DIAM. (MIN)	ROD CIRCLE DIAM. (MIN)	TOWER BASE DIAM. (MIN)	DRILLED SHAFT	V Bar # 11
				DIAM.	NUMBER
(m)	(mm)	(mm)	(mm)	(m)	(each)
25	450	760	610	1.2	14
27	450	760	610	1.2	14
30	450	760	610	1.2	14
34	450	760	610	1.2	14
37	525	915	660	1.4	18
40	525	915	710	1.4	18
43	525	915	710	1.4	18
46	675	965	760	1.5	22
49	675	965	810	1.5	22

ANCHOR ROD & SHAFT REINFORCEMENT DESIGN TABLE (ENGLISH)					
TOWER HEIGHT	ANCHOR ROD DIAM. (MIN)	ROD CIRCLE DIAM. (MIN)	TOWER BASE DIAM. (MIN)	DRILLED SHAFT	V Bar # 11
				DIAM.	NUMBER
(ft)	(in)	(in)	(in)	(in)	(each)
80	1.5	30	24	48	14
90	1.5	30	24	48	14
100	1.5	30	24	48	14
110	1.5	30	24	48	14
120	1.75	36	26	54	18
130	1.75	36	28	54	18
140	1.75	36	28	54	18
150	2.25	38	30	60	22
160	2.25	38	32	60	22

SHAFT LENGTH DESIGN TABLE (METRIC) (LENGTH IN METERS)										
	SOIL CONSISTENCY	AVERAGE STRENGTH (Qu in kPa)	LIGHT TOWER HEIGHT (meters)								
			24	27	30	34	37	40	43	46	49
Cohesive	SOFT	< 50	6.2	6.5	6.9	7.2	7.6	8.0	8.3	8.7	9.1
	MEDIUM	50 to 100	5.1	5.3	5.6	5.8	6.2	6.4	6.7	7.0	7.3
	STIFF	100 to 200	4.4	4.5	4.7	4.8	5.2	5.4	5.5	5.9	6.1
	VERY STIFF	200 to 400	3.8	3.9	4.1	4.2	4.5	4.6	4.7	5.1	5.2
	HARD	> 400	3.5	3.5	3.6	3.7	4.0	4.1	4.2	4.5	4.6
Granular		(N in BLOWS/0.3M)									
	VERY LOOSE	< 5	5.0	5.2	5.4	5.6	5.8	6.0	6.2	6.3	6.5
	LOOSE	5 to 10	4.6	4.8	4.9	5.1	5.3	5.5	5.6	5.7	5.9
	MEDIUM	10 to 25	4.4	4.5	4.7	4.9	5.0	5.2	5.3	5.5	5.6
	DENSE	25 to 50	4.1	4.3	4.5	4.6	4.7	4.9	5.0	5.2	5.3
	VERY DENSE	> 50	3.9	4.1	4.2	4.4	4.5	4.7	4.8	4.9	5.1

SHAFT LENGTH DESIGN TABLE (ENGLISH) (LENGTH IN FEET)										
	SOIL CONSISTENCY	AVERAGE STRENGTH (Qu in tsf)	LIGHT TOWER HEIGHT (feet)								
			80	90	100	110	120	130	140	150	160
Cohesive	SOFT	< 0.5	20.4	21.5	22.5	23.6	25.0	26.1	27.2	28.5	29.8
	MEDIUM	0.5 to 1	16.8	17.5	18.3	19.0	20.3	21.1	21.8	23.1	24.0
	STIFF	1 to 2	14.3	14.8	15.4	15.9	17.1	17.6	18.1	19.3	19.9
	VERY STIFF	2 to 4	12.6	13.0	13.3	13.7	14.8	15.2	15.6	16.7	17.1
	HARD	> 4	11.4	11.6	11.9	12.2	13.2	13.5	13.8	14.9	15.2
Granular		(N in BLOWS/FT.)									
	VERY LOOSE	< 5	16.4	17.1	17.8	18.5	18.9	19.6	20.2	20.7	21.4
	LOOSE	5 to 10	15.0	15.6	16.2	16.8	17.3	17.9	18.4	18.9	19.5
	MEDIUM	10 to 25	14.3	14.9	15.5	16.0	16.4	17.0	17.5	17.9	18.5
	DENSE	25 to 50	13.6	14.1	14.6	15.1	15.5	16.1	16.5	16.9	17.5
	VERY DENSE	> 50	12.9	13.4	13.9	14.4	14.8	15.3	15.7	16.1	16.6

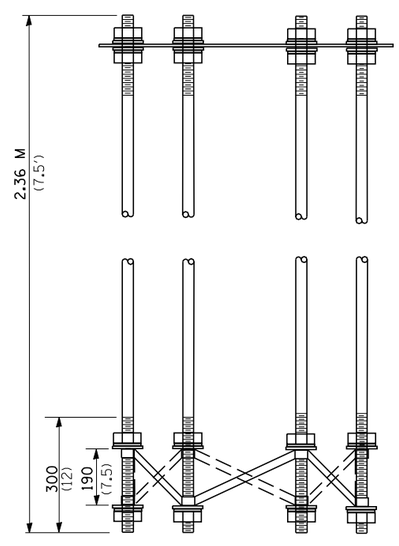

ANCHOR ROD CAGE

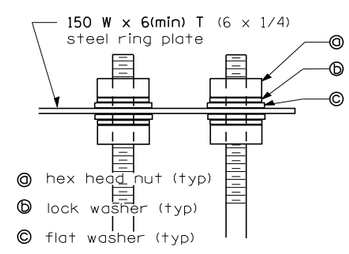

ANCHOR ROD CAGE TOP

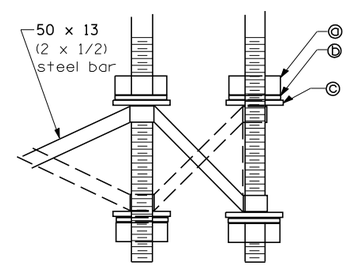

ANCHOR ROD CAGE BOTTOM

GENERAL NOTES

1) The shaft length(s) provided in the foundation schedule are based on the soil borings included in the plans. If different soils are encountered, the engineer shall be notified to provide a revised length.
2) Use 8 rods min., see design table for minimum anchor rod diameter. Anchor rod quantity, diameter, and length shall be determined by the approved drawings furnished by pole manufacturer.
3) All foundation reinforcement steel to be epoxy coated. Use #11 vertical bars and #4 spiral reinforcement - see design table.
4) The cost of reinforcing is incidental to the foundation.
5) Steel anchor bolt forms shall not be removed for a minimum of 3 days after concrete is poured and the tower shall not be set for a minimum of 7 days or as approved by the Engineer.
6) Coordinate bolt circle diameter of the tower with the bolt circle diameter of the anchor bolt cage.
7) Foundation shall be in accordance with applicable portions of Section 516 and 837 of the Standard Specifications.
8) Foundation shall be poured monolithically with no construction joints allowed.
9) Place grounding electrodes in an access well, if there is a conflict in using the wireway window.
10)

All dimensions are in millimeters (inches) unless otherwise shown.

DATE	REVISIONS
	Corrected 4/12/06

LIGHT TOWER FOUNDATION

PLOT DATE = 3/29/2007
FILE NAME = c:\projects\d514006 (d8)\lg107a.dgn
PLOT SCALE = 84.2353 ms / IN.
USER NAME = bugard