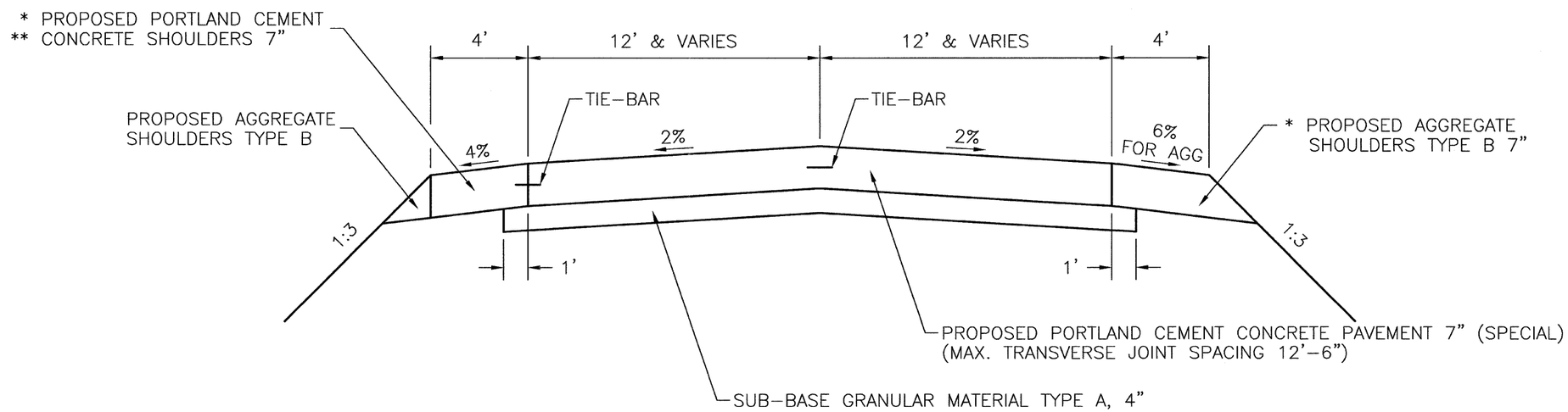

PROPOSED TYPICAL SECTION

STA. 113+20 TO STA. 114+88.50

* NOTE:
SEE PLAN & PROFILE SHEETS FOR LOCATIONS OF PROPOSED PORTLAND CEMENT CONCRETE SHOULDERS & AGGREGATE SHOULDERS.

** NOTE:
PCC SHOULDERS SHALL HAVE A UNIFORM THICKNESS OF 7" FOR FULL WIDTH OF SHOULDER.

NOTE: STATION EQUATIONS
STA. 319+17.50 (BK) = STA. 291+61.00 (AH)
STA. 359+98.77 (BK) = STA. 359+99.80 (AH)
STA. 461+16 (BK) = STA. 110+00 (AH)

DRAWN BY: L.A.G.	CAD/.DWG: TYPX	REVISIONS DATE / BY	CHAMLIN & ASSOCIATES	PERU MORRIS ILLINOIS	C.H. 33 (ANGLING ROAD) 2007 SECTION 05-00198-00-RS	TYPICAL SECTIONS	SCALE: NONE / SHEET 11
CHECKED BY: D.J.D.	DATE: 04/07						FILE NO.: 6813.00Y-1 / OF 33