STATE OF ILLINOIS
DEPARTMENT OF TRANSPORTATION

ROUTE NO.	SECTION	COUNTY	TOTAL SHEETS	SHEET NO.
FAI 57	(X1-6-2)HBK	Williamson	272	147
FED. ROAD DIST. NO. 7		ILLINOIS	FED. AID PROJECT-	

SHEET NO. 12
33 SHEETS

Contract # 98994

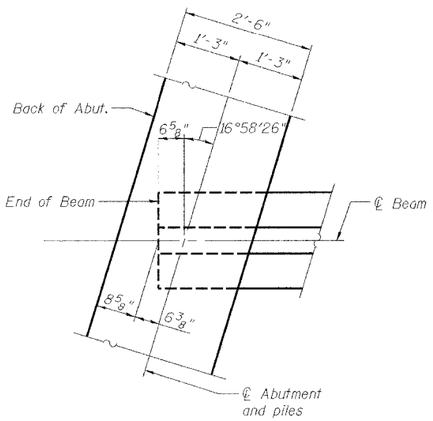

DETAIL A

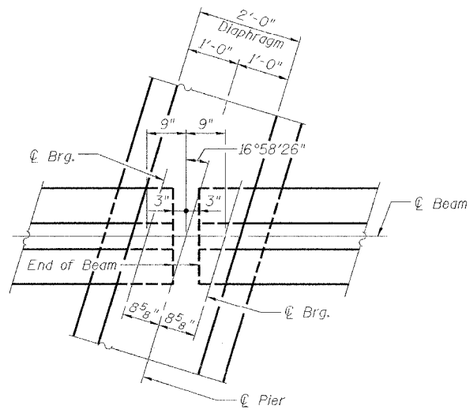

DETAIL B

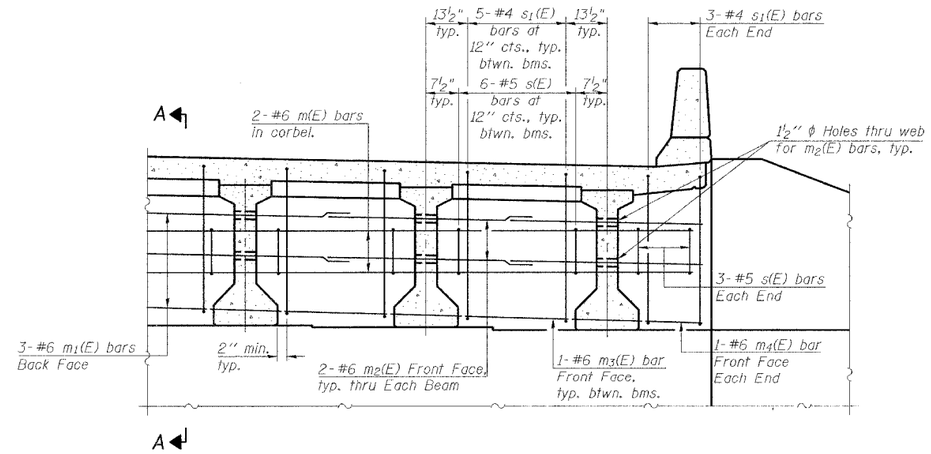

DIAPHRAGM ELEVATION AT ABUTMENT

MIN. BAR LAP

#5 bar = 2'-2"
#6 bar = 2'-9"

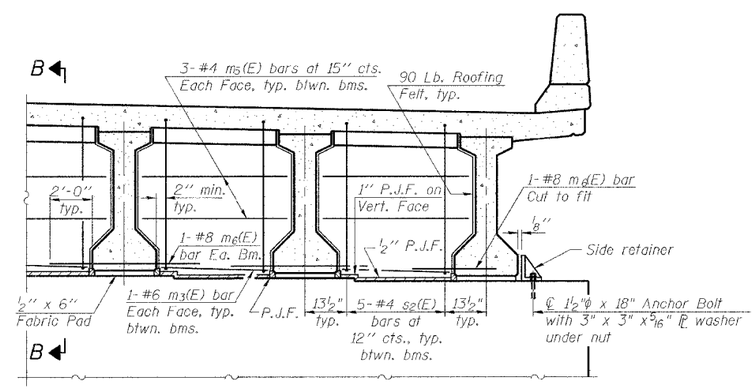

DIAPHRAGM AT PIERS

Notes:

Reinforcement bars in diaphragm are billed with superstructure on sheet 10 of 33.

Concrete in diaphragm is included with Concrete Superstructure on sheet 10 of 33.

For details of bars s(E), s_1(E) and s_2(E) see sheet 10 of 33.

The s(E), s_1(E) and s_2(E) bars shall be placed parallel to the beams. Spacing for these bars shall be at right angles to the beams.

See sheet 13 of 33 for Sections A-A and B-B.

Cost of 90 Lb. roofing felt is included with Concrete Superstructure.

The side retainer shall be galvanized after shop fabrication according to AASHTO M 111 and ASTM A 385. Cost of side retainer and anchor bolts shall be included with Concrete Structures.

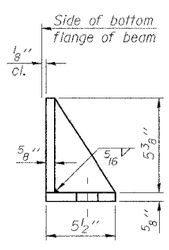

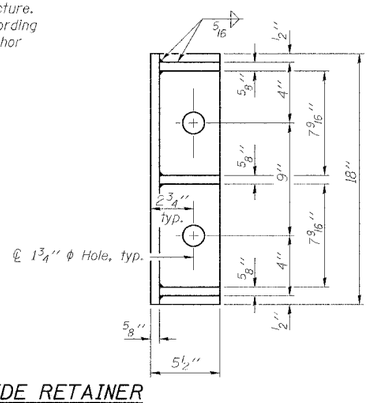

SIDE RETAINER

Equivalent rolled angle with stiffeners will be allowed in lieu of welded plates.

THOUVENOT, WADE & MOERCHEN, INC.

TWM

DESIGNED	ALN
CHECKED	BWP
DRAWN	KBF
CHECKED	ALN/BWP

DIAPHRAGM DETAILS
MORGAN AVE. OVER I-57
FAI ROUTE 57 - SEC. (X1-6-2)HBK
WILLIAMSON COUNTY
STATION 34+69.21
STRUCTURE NO. 100-0092

3/19/2007 P:\040600\dgn\Bridge\S12_040600_DIAPH1.dgn