QI058

MANHOLE ADJUSTMENT NOTES

FIELD VERIFY HEIGHT OF ADJUSMENT PRIOR TO ORDERING MATERIALS. TOP OF FRAME AND GRATE SHALL BE FLUSH WITH FINISHED PAVEMENT ELEVATION AS SHOWN ON THE ATTACHED PLANS AND CROSS SECTIONS.

IF RISER RING IS CAST-IN-PLACE, THE CONCRETE SHALL BE STRUCTURAL PORTLAND CEMENT CONCRETE IN ACCORDANCE WITH ITEM 610.

THE CONTRACTOR IS RESPONSIBLE FOR PREPARING AND CURING CONCRETE CYLINDERS (1 SET REQUIRED FOR EACH 50 CY.) ONCE CURED, THE CYLINDERS SHALL BE TURNED OVER TO THE RESIDENT ENGINEER FOR TESTING.

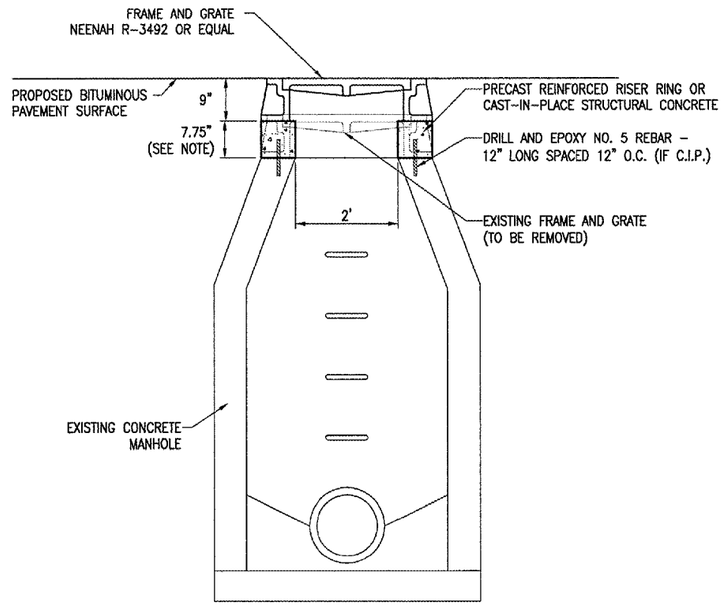

MANHOLE ADJUSTMENT DETAIL

"NOT TO SCALE"

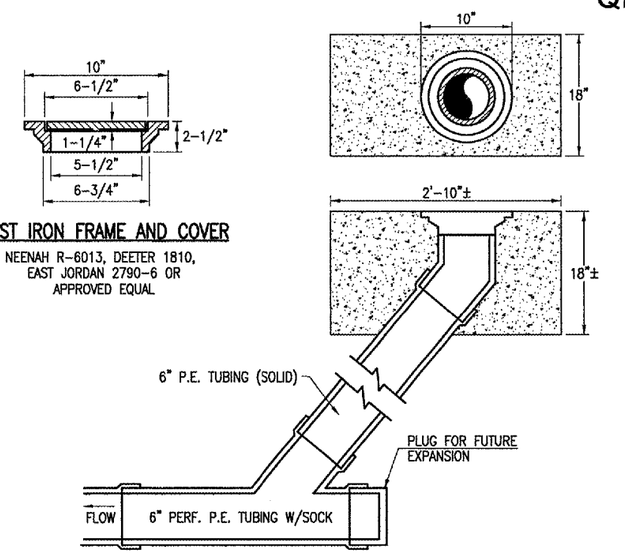

CAST IRON FRAME AND COVER

NEENAH R-6013, DEETER 1810, EAST JORDAN 2790-6 OR APPROVED EQUAL

CLEANOUT HOLE-TYPE B

INSPECTION HOLE NOTES

DIAMETER OF PIPE AS SPECIFIED.

TOP OF INSPECTION HOLES SHALL BE 1" ABOVE FINISH GROUND LINE AT LOCATION SHOWN ON PLANS.

1/2" CHAMFER TO BE USED ON ALL EXPOSED EDGES OF INSPECTION HOLES.

THE CONCRETE SHALL BE STRUCTURAL PORTLAND CEMENT CONCRETE (NON- REINFORCED) IN ACCORDANCE WITH ITEM 610.

THE CONTRACTOR IS RESPONSIBLE FOR PREPARING AND CURING CONCRETE CYLINDERS (1 SET REQUIRED FOR EACH 50 CY.) ONCE CURED, THE CYLINDERS SHALL BE TURNED OVER TO THE RESIDENT ENGINEER FOR TESTING.

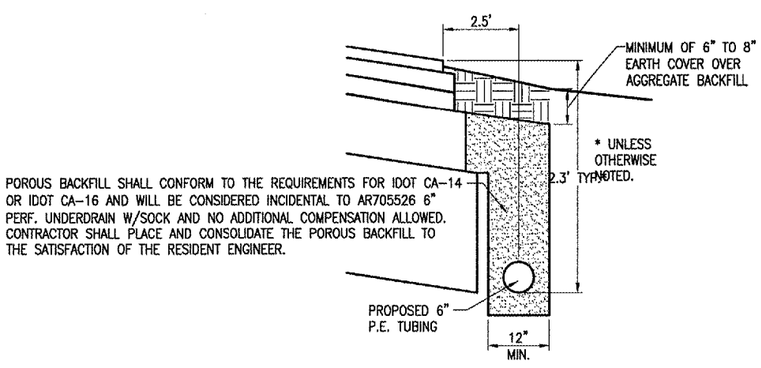

UNDERDRAIN DETAIL

"NOT TO SCALE"

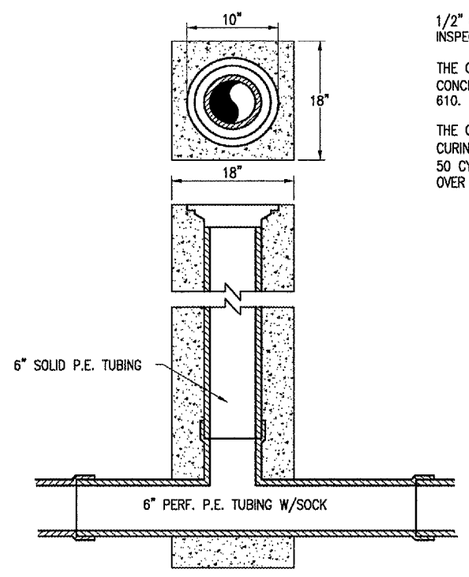

INSPECTION HOLE-TYPE A

"NOT TO SCALE"

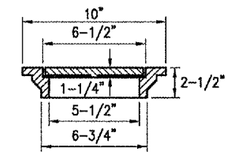

CAST IRON FRAME AND COVER

NEENAH R-6013, DEETER 1810, EAST JORDAN 2790-6 OR APPROVED EQUAL

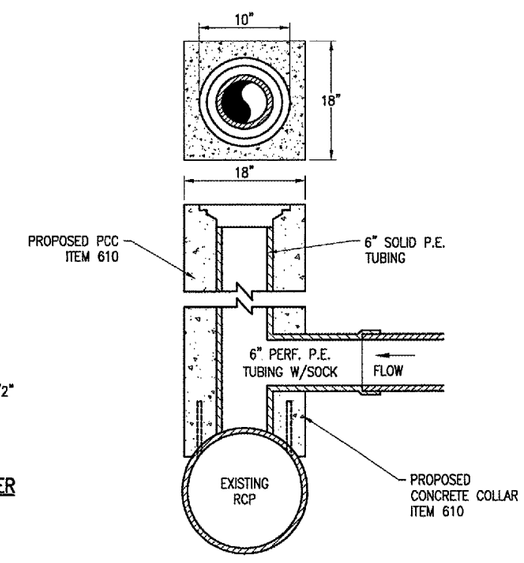

INSPECTION HOLE DETAIL - TYPE B

"NOT TO SCALE"

DATE	REVISION	BY

QUINCY REGIONAL AIRPORT
BALDWIN FIELD
ADAMS COUNTY, ILLINOIS

IL PROJ.: UIN-3690 A.I.P. PROJ.: 3-17-0085-81

HSI Project No. 82407TXYD 0100
Filename R-131DRN.DWG
Scale NOT TO SCALE
Date 03/19/07

LAYOUT	MLH	03/15/07
DRAWN	ESC	03/19/07
REVIEWED	JDW	03/19/07

HANSON

Hanson Professional Services Inc.
1525 South Sixth Street
Springfield, Illinois 62703-2888
Offices Nationwide

REALIGN, WIDEN AND REHABILITATE TAXIWAY "C" - PHASE 2

PROPOSED DRAINAGE DETAILS

MAY 09, 2007 2:11 PM MLH
I:\AIRPORTS\QUINCY\82407TXYD\AIRPORT\SHEETS\R-131DRN.DWG - DETAILS