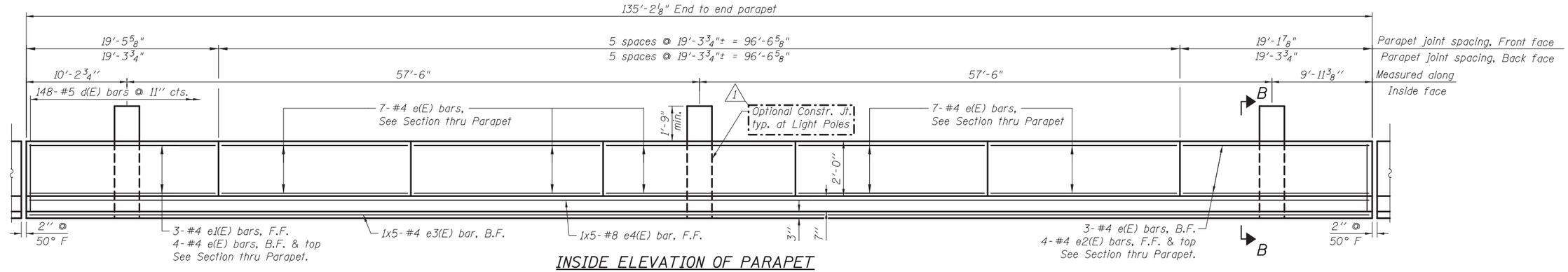

INSIDE ELEVATION OF PARAPET

(West parapet shown - East parapet is a mirror image)

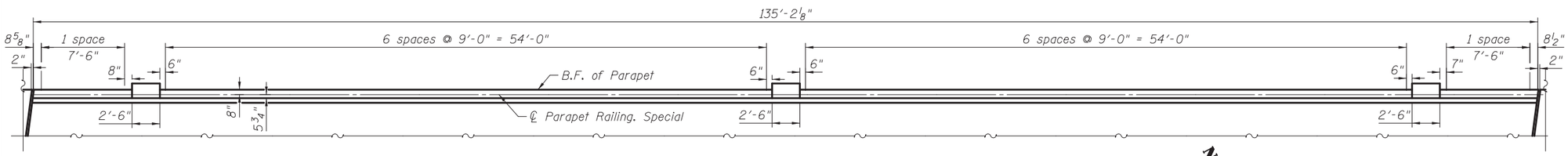

PLAN - PARAPET AND PARAPET RAILING

(Parapet Railing Post Spacing along ℄ Parapet Railing)
(West Parapet shown - East Parapet is a mirror image)

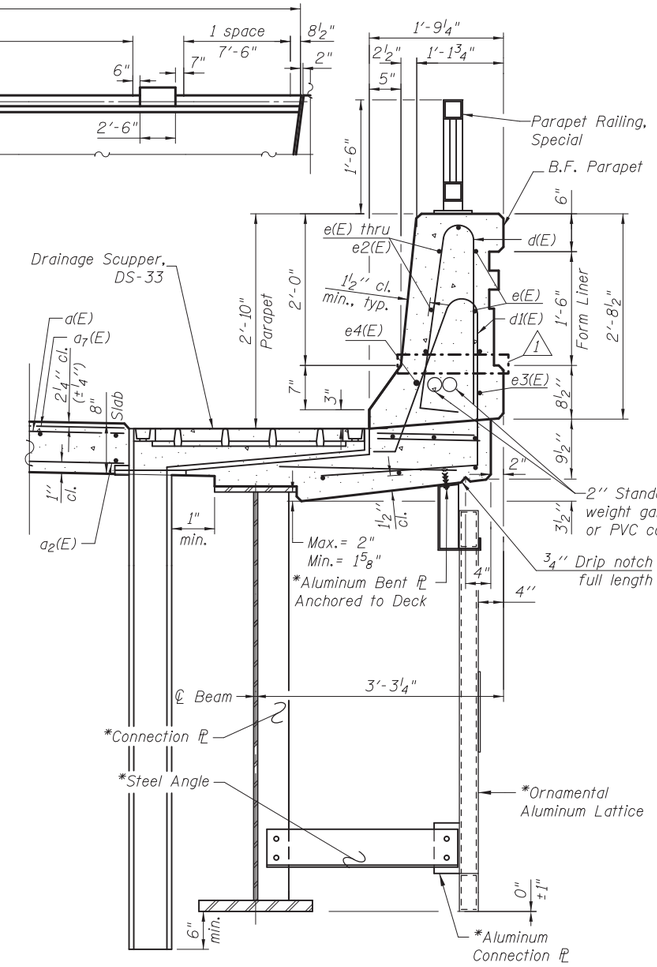

SECTION THRU PARAPET

(All edges have a 3/4" chamfer-Except at Form Liner locations)

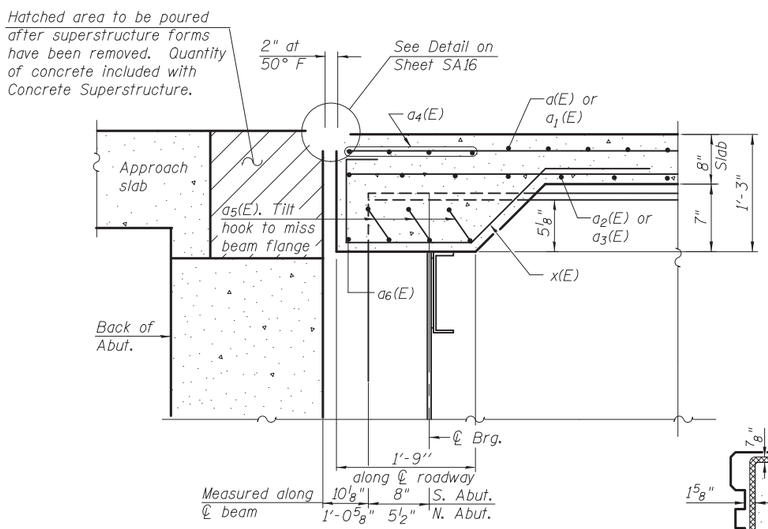

SECTION A-A

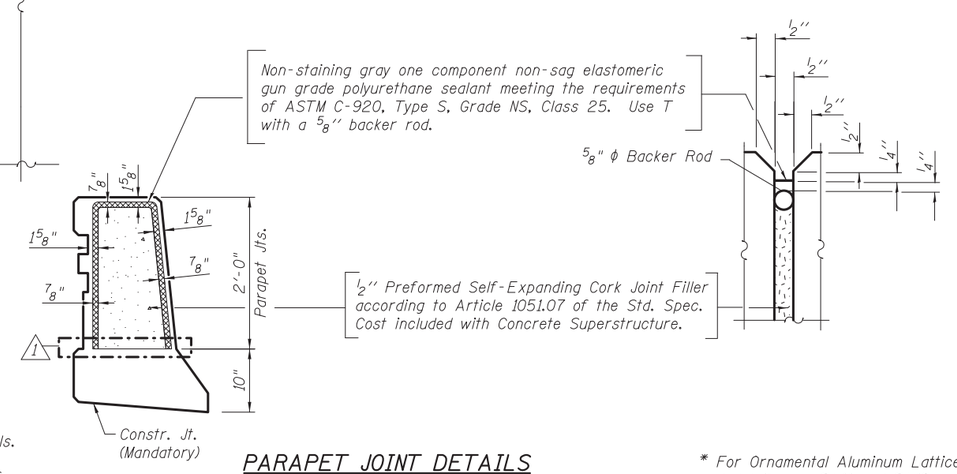

PARAPET JOINT DETAILS

MINIMUM BAR LAP

(Parapet)
#4 bar = 2'-0"
#8 bar = 5'-2"

Notes:
See sheet SA12 for Parapet Form Liner details.
See sheet SA15 for Parapet Railing details.
See sheet SA17 for Drainage Scupper, DS-33 details.
See sheet SA10 for Section B-B.
Bars indicated thus 1x5-#8 etc. indicates 1 lines of bars with 5 lengths per line.

* For Ornamental Aluminum Lattice connections and details see SA11 and SA12.

CIVILTECH
450 E Devon Ave, Suite 300
Itasca, Illinois 60143
Tel: 630.773.3900 Fax: 630.773.3975
www.civiltechinc.com

DRAWN	- M. LANGE	REVISED	- 1 5/3/12 M.F.L.
DESIGNED	- D. ATKINS	REVISED	-
CHECKED	- G. HATLESTAD	REVISED	-
DATE	- 5/3/2012	REVISED	-

STATE OF ILLINOIS
DEPARTMENT OF TRANSPORTATION

SUPERSTRUCTURE DETAILS I
ILLINOIS ROUTE 31 OVER CRYSTAL CREEK
STRUCTURE NO. 056-0077

SHEET NO. SA9 OF SA33 SHEETS

O.R. RTE.	SECTION	COUNTY	TOTAL SHEETS	SHEET NO.
0003	18A-2	MCHENRY	825	469
		CONTRACT NO. 60F72		
		ILLINOIS FED. AID PROJECT		

J:\2154\cad\sheet\Roadway\20-Structures & Walls\DL SN 056-0077\0560077-60F72-09-SSD_rev2.dgn 10:35:41 AM
mfl 5/21/2012