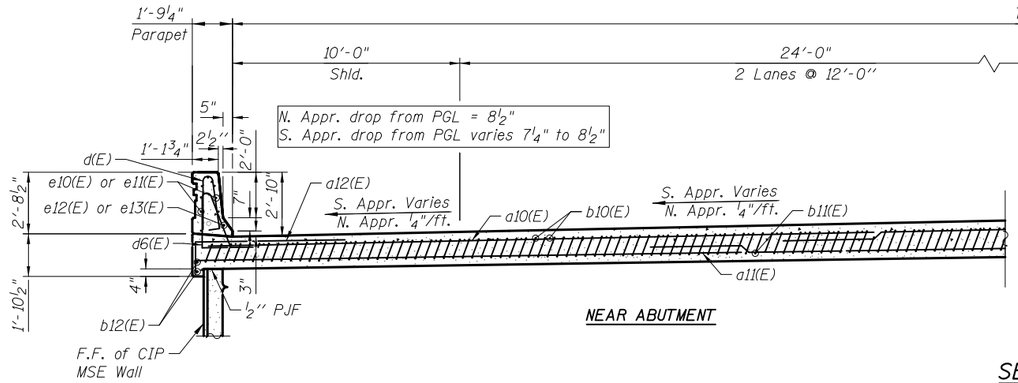

NEAR ABUTMENT

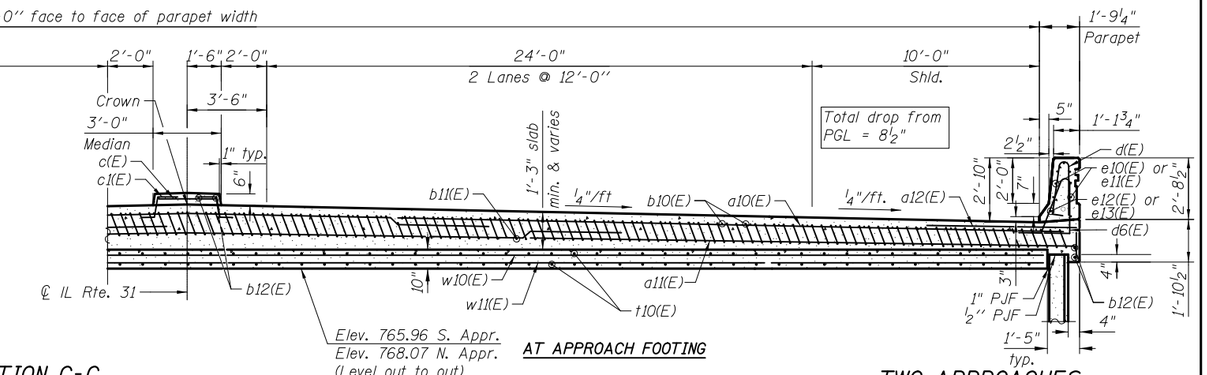

AT APPROACH FOOTING

SECTION C-C

Notes:

See sheet SA13 for Section A-A.

Approach slab and parapet concrete shall be paid for as Concrete Superstructure.

Approach footing concrete shall be paid for as Concrete Structures.

Reinforcement shall be paid for as Reinforcement Bars, Epoxy Coated.

For v(E) bar details, see sheet SA23.

The approach footing maximum applied service bearing pressure (Qmax) = 2.0 ksf.

For bar splicer details, see sheet SA29.

Cost of excavation for approach footing included with Concrete Structures.

For additional parapet details see sheet SA12 for formliner details and dimensions and SA28 for parapet joint details.

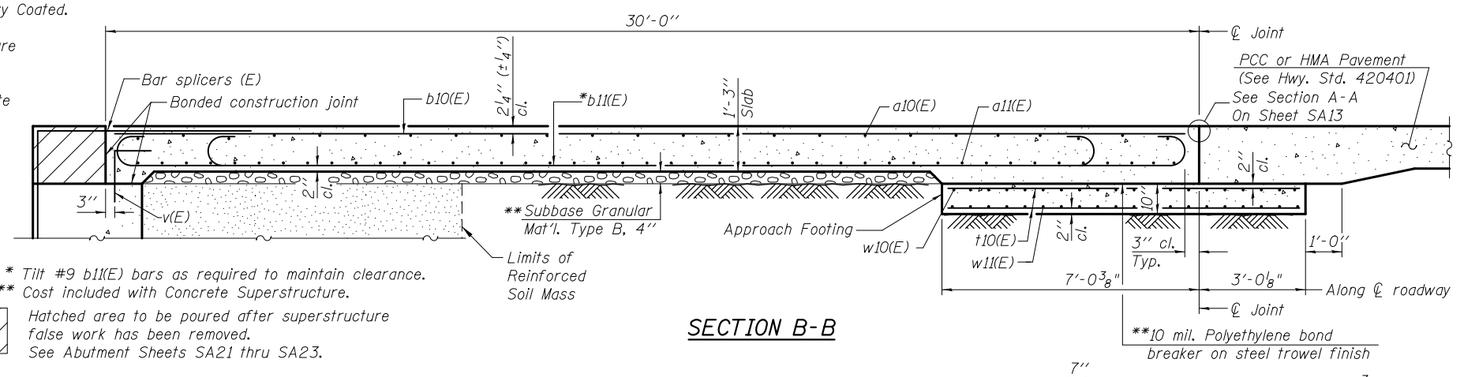

* Tilt #9 b11(E) bars as required to maintain clearance.
** Cost included with Concrete Superstructure.

Hatched area to be poured after superstructure false work has been removed. See Abutment Sheets SA21 thru SA23.

SECTION B-B

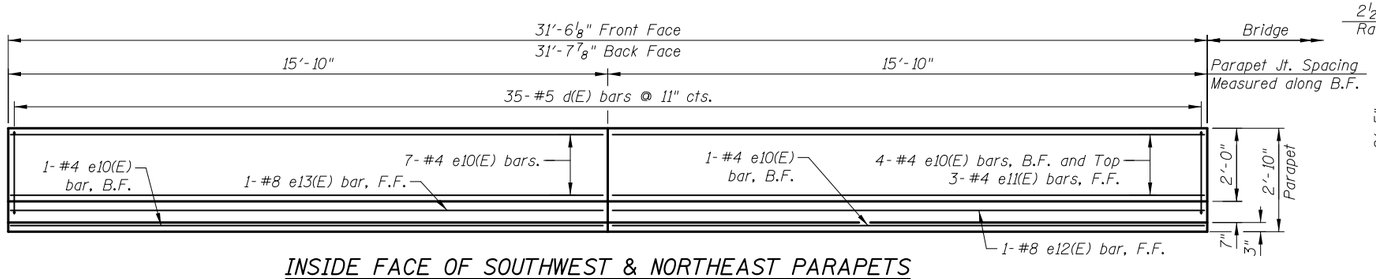

INSIDE FACE OF SOUTHWEST & NORTHEAST PARAPETS

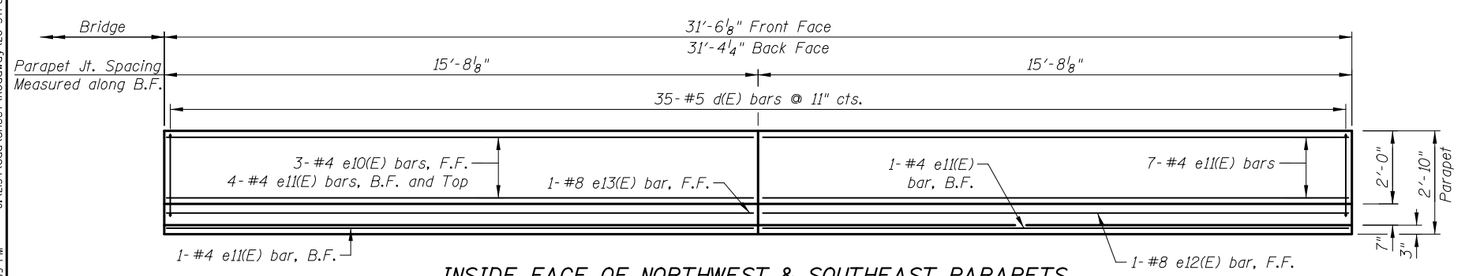

INSIDE FACE OF NORTHWEST & SOUTHEAST PARAPETS

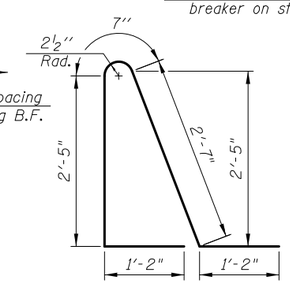

BAR d6(E)

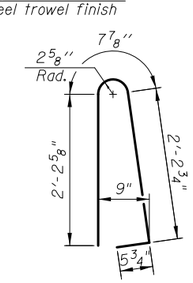

BAR d(E)

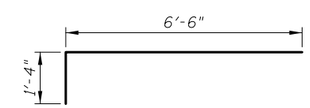

BAR a12(E)

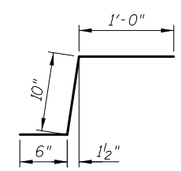

BAR c1(E)

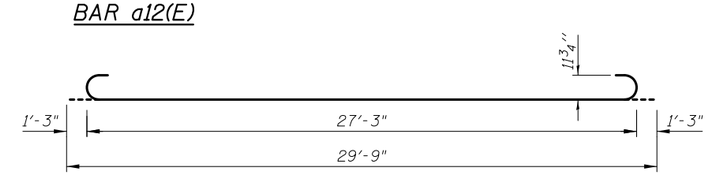

BAR b11(E)

TWO APPROACHES BILL OF MATERIAL

Bar	No.	Size	Length	Shape
a10(E)	200	#4	21'-7"	
a11(E)	276	#5	28'-4"	
a12(E)	100	#6	7'-10"	
a13(E)	16	#5	3'-6"	
b10(E)	128	#4	29'-8"	
b11(E)	378	#9	29'-9"	
b12(E)	8	#5	29'-8"	
c(E)	60	#5	2'-8"	
c1(E)	120	#5	2'-4"	
d(E)	140	#5	5'-7"	
d6(E)	132	#5	7'-11"	
e10(E)	32	#4	15'-6"	
e11(E)	32	#4	15'-4"	
e12(E)	4	#8	15'-4"	
e13(E)	4	#8	15'-6"	
t10(E)	304	#4	9'-8"	
w10(E)	120	#5	27'-5"	
w11(E)	160	#5	21'-5"	

Item	Unit	Quantity
Concrete Structures	Cu. Yd.	47.0
Concrete Superstructure	Cu. Yd.	257.1
Bridge Deck Grooving	Sq. Yd.	480
Protective Coat	Sq. Yd.	563
Reinforcement Bars, Epoxy Coated	Pound	65,620
Form Liner Textured Surface, Special	Sq. Ft.	177

Bars indicated thus 1 x 3-#8 etc. indicates 1 line of bars with 3 lengths per line.

CIVILTECH
450 E Devon Ave, Suite 300
Itasca, Illinois 60143
Tel: 630.773.3900 Fax: 630.773.3975
www.civiltechinc.com

DRAWN	- M. LANGE	REVISED	-
DESIGNED	- D. ATKINS	REVISED	-
CHECKED	- G. HATLESTAD	REVISED	-
DATE	- 5/3/2012	REVISED	-

STATE OF ILLINOIS
DEPARTMENT OF TRANSPORTATION

BRIDGE APPROACH SLAB DETAILS
ILLINOIS ROUTE 31 OVER CRYSTAL CREEK
STRUCTURE NO. 056-0077

SHEET NO. SA14 OF SA33 SHEETS

O.R. RTE.	SECTION	COUNTY	TOTAL SHEETS	SHEET NO.
0003	18A-2	MCHENRY	825	474

CONTRACT NO. 60F72

ILLINOIS FED. AID PROJECT

J:\2154\cad\sheet\Roadway\20-Structures & Walls\01.SN 056-0077\0560077-60F72-14-APD_rev.dgn 4:16:39 PM klb 5/2/2012