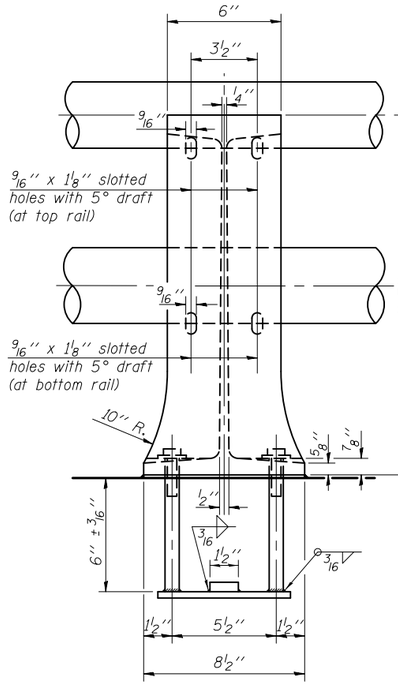

VIEW B-B

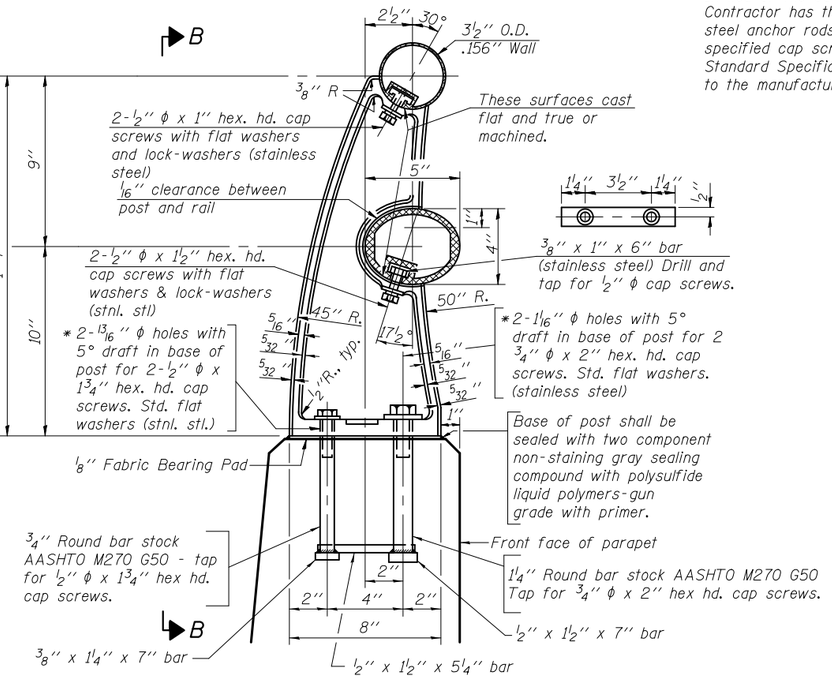

SECTION A-A

RAIL POST DETAILS

* In lieu of the cast-in-place anchor device shown, the Contractor has the option of drilling and setting stainless steel anchor rods of the same diameter and grade as the specified cap screws according to Article 509.06 of the Standard Specifications. Embedment shall be according to the manufacturer's specifications.

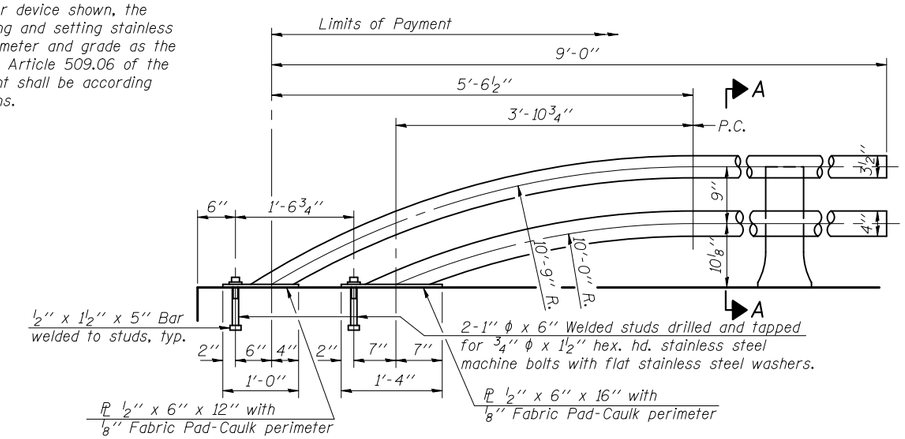

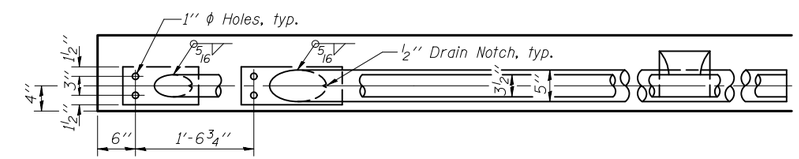

RAIL TERMINAL SECTION

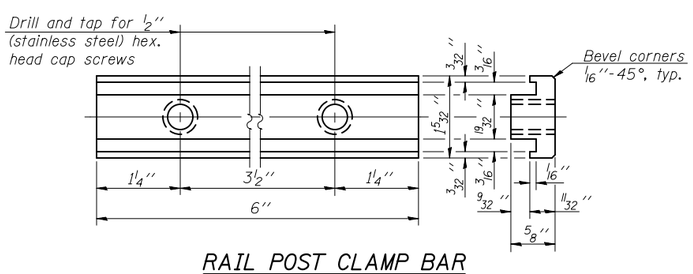

RAIL POST CLAMP BAR

For Top Rail

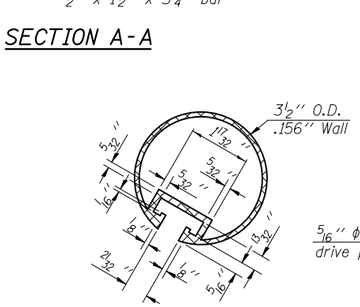

SECTION THRU TOP RAIL

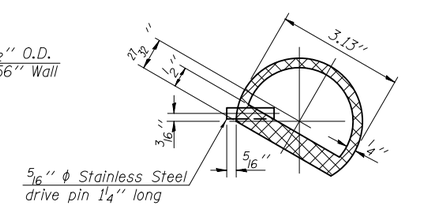

SECTION THRU SPLICE

For Top Rail

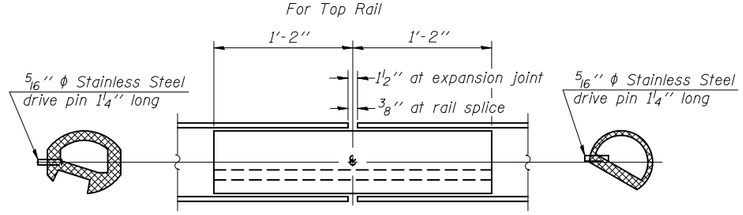

BOTTOM RAIL

TOP RAIL

RAIL SPLICE

(7'-0'' to 10'-0'' Post spacing)

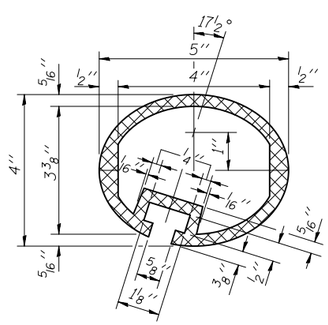

SEC. THRU ELLIPTICAL RAIL SECTION

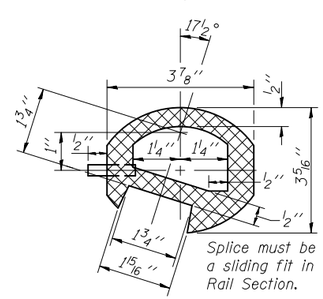

SEC. THRU SPLICE

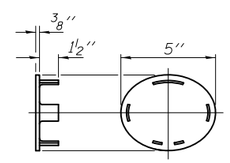

CAST END CAP

For bottom rail

DRIVE FIT TYPE

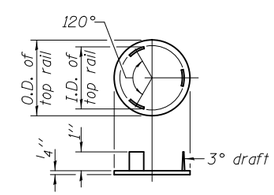

CAST END CAP

For top rail

Note:
The end rail post shall be set back as required for the terminal rail section.

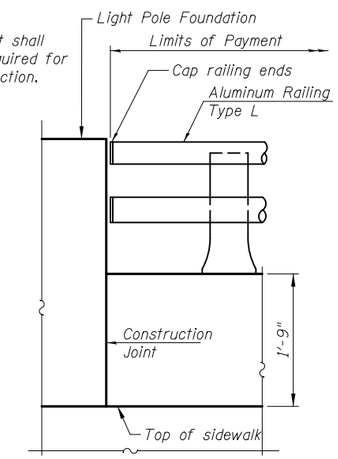

RAIL END TREATMENT FOR LIGHT POLE FOUNDATION

Notes:
All Posts shall be normal to parapet.
All joints in rail shall be spliced per detail.
All exposed rail ends shall be capped per detail.
Provide 1-⅛'' and 2-1/16'' Aluminum Shims for 25% of the Posts. Rail elements shall be parallel to Grade-high spots will be ground and low spots shimmed.
See sheet WG2 for rail post spacing.

BILL OF MATERIAL

Item	Unit	Quantity
Aluminum Railing, Type L	Foot	97

CIVILTECH
450 E Devon Ave, Suite 300
Itasca, Illinois 60143
Tel: 630.773.3900 Fax: 630.773.3975
www.civiltechinc.com

DRAWN	-	K. BOCHNOWSKI
DESIGNED	-	M. LANGE
CHECKED	-	G. HATLESTAD
DATE	-	5/3/2012

STATE OF ILLINOIS
DEPARTMENT OF TRANSPORTATION

ALUMINUM RAILING, TYPE L
WALL G, IL RTE. 31
STRUCTURE NO. 056-2506

SHEET NO. WG4 OF WG5 SHEETS

O.R. RTE.	SECTION	COUNTY	TOTAL SHEETS	SHEET NO.
0003	18A-2	MCHENRY	825	638

CONTRACT NO. 60F72

ILLINOIS FED. AID PROJECT

klb 5/2/2012 4:25:36 PM J:\2154\cad\sheet\Roadway\20-Structures & Walls\2-Wall G\0562506-60F72-04-RTL_rev.dgn