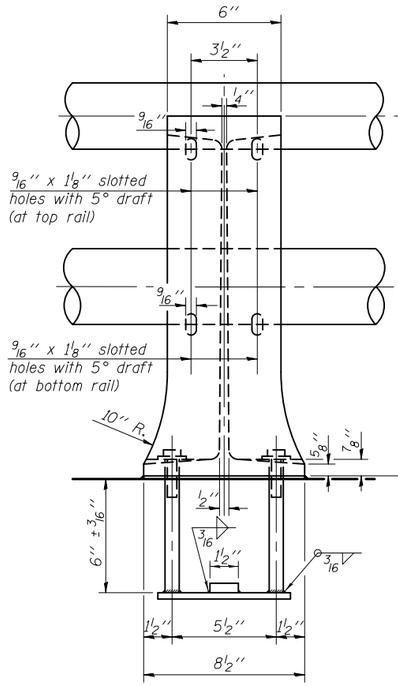

VIEW B-B

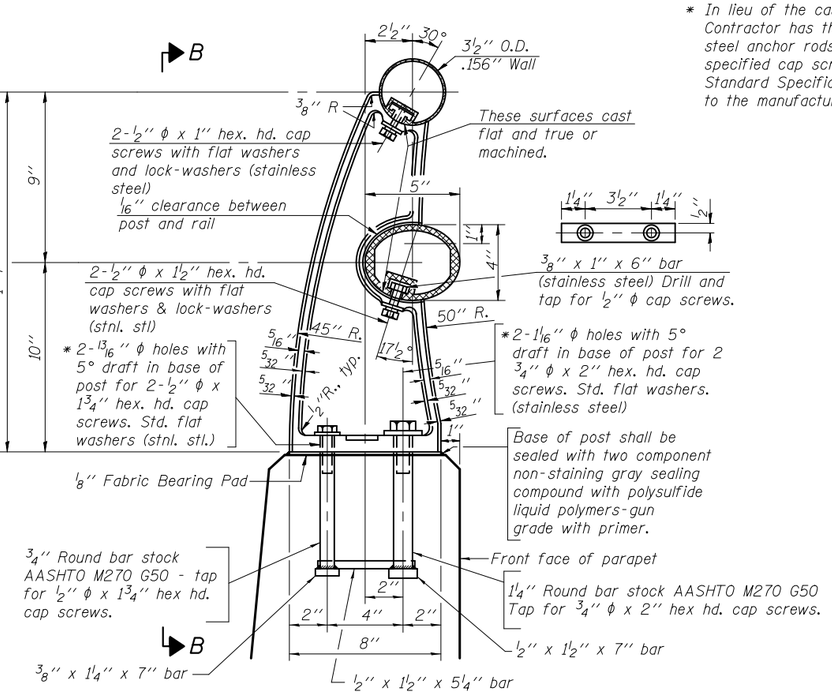

SECTION A-A

* In lieu of the cast-in-place anchor device shown, the Contractor has the option of drilling and setting stainless steel anchor rods of the same diameter and grade as the specified cap screws according to Article 509.06 of the Standard Specifications. Embedment shall be according to the manufacturer's specifications.

RAIL POST DETAILS

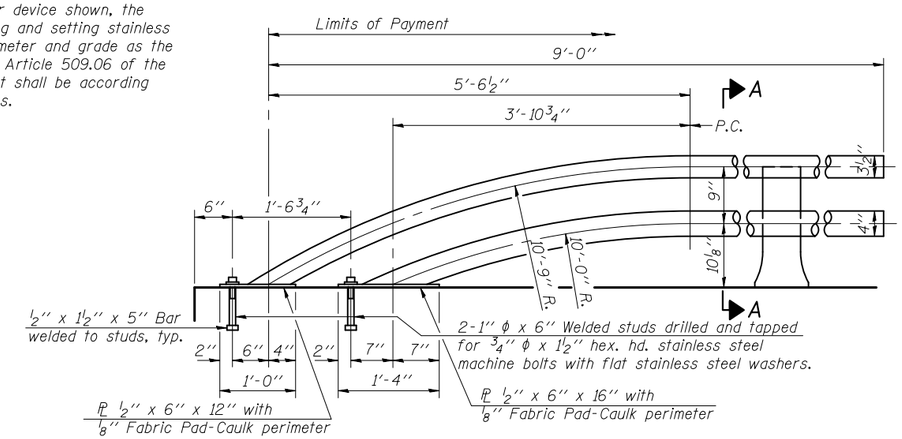

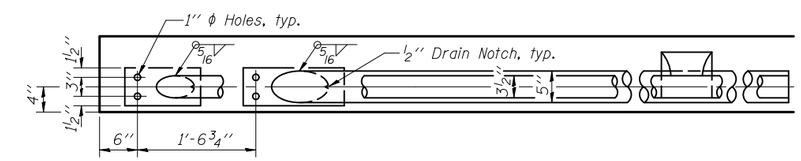

RAIL TERMINAL SECTION

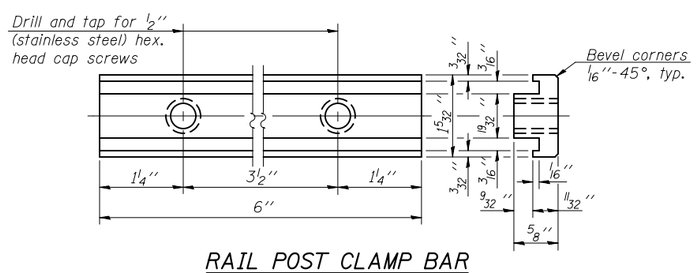

RAIL POST CLAMP BAR

For Top Rail

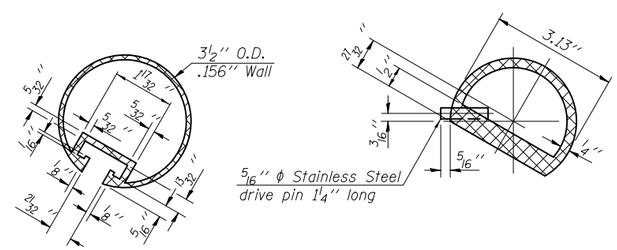

SECTION THRU TOP RAIL

SECTION THRU SPLICE

For Top Rail

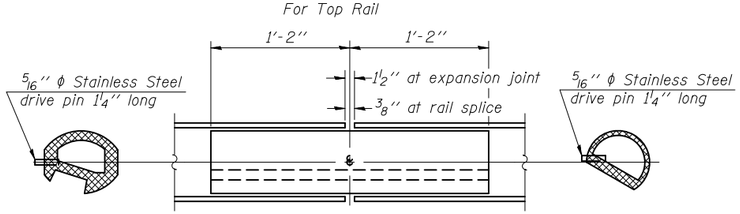

BOTTOM RAIL

TOP RAIL

RAIL SPLICE

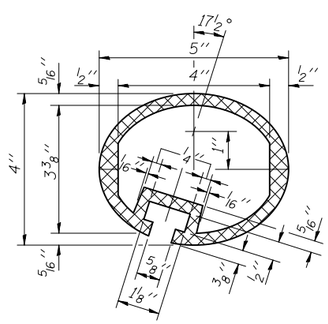

SEC. THRU ELLIPTICAL RAIL SECTION

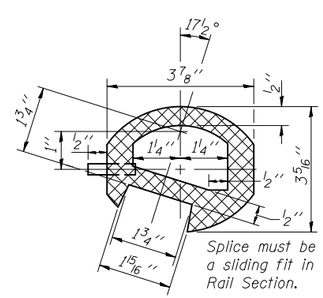

SEC. THRU SPLICE

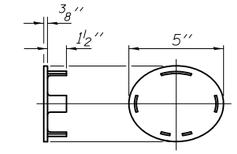

CAST END CAP

For bottom rail

DRIVE FIT TYPE

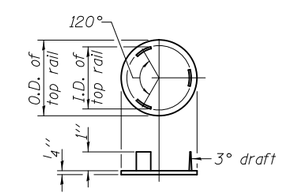

CAST END CAP

For top rail

Note:
The end rail post shall be set back as required for the terminal rail section.

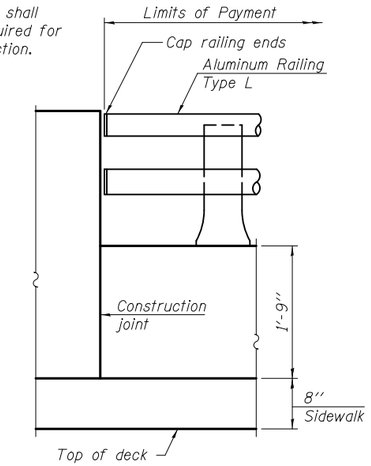

RAIL END TREATMENT FOR TYPE 5 AND 6 TERMINAL

Notes:
All Posts shall be normal to parapet.
All joints in rail shall be spliced per detail.
All exposed rail ends shall be capped per detail.
Provide 1-⅛'' and 2-1/16'' Aluminum Shims for 25% of the Posts. Rail elements shall be parallel to Grade-high spots will be ground and low spots shimmed.
See sheet WJ3 for rail post spacing.

BILL OF MATERIAL

Item	Unit	Quantity
Aluminum Railing, Type L	Foot	185

R-20 7-1-10 (7'-0'' to 10'-0'' Post spacing)

CIVILTECH
450 E Devon Ave, Suite 300
Itasca, Illinois 60143
Tel: 630.773.3900 Fax: 630.773.3975
www.civiltechinc.com

DRAWN	D. ATKINS
DESIGNED	M. LANGE
CHECKED	G. HATLESTAD
DATE	JANUARY 27, 2012

STATE OF ILLINOIS
DEPARTMENT OF TRANSPORTATION

ALUMINUM RAILING, TYPE L
WALL J; HUNTINGTON DRIVE
STRUCTURE NO. 056-2503
SHEET NO. WJ5 OF WJ6 SHEETS

O.R. RTE.	SECTION	COUNTY	TOTAL SHEETS	SHEET NO.
0003	18A-2	MCHENRY	825	654

CONTRACT NO. 60F72
ILLINOIS FED. AID PROJECT

J:\2154\cad\sheet\Roadway\20-Structures & Walls\15-Wall J\0562503-60F72-05-RTL.dgn 4:27:03 PM
klb 5/2/2012