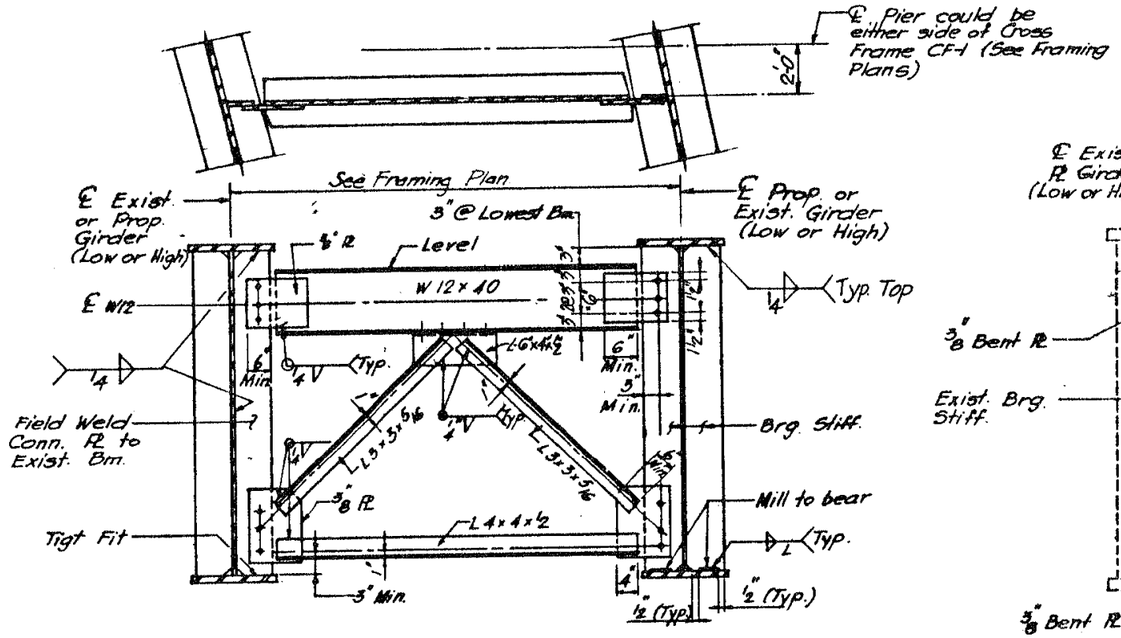

CF 1

TYPICAL END CROSS FRAME

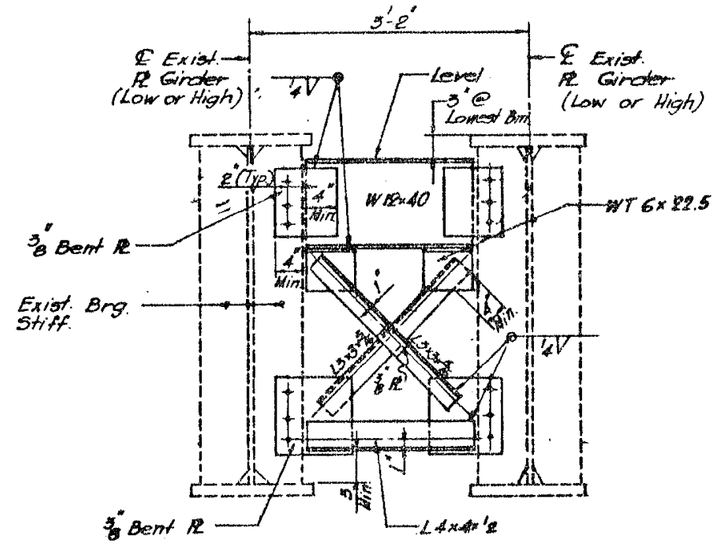

CF 3

TYPICAL END CROSS FRAME

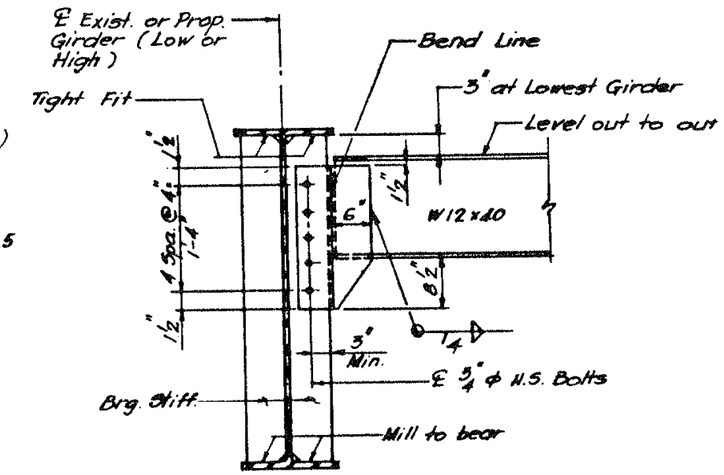

D 2

END DIAPHRAGM

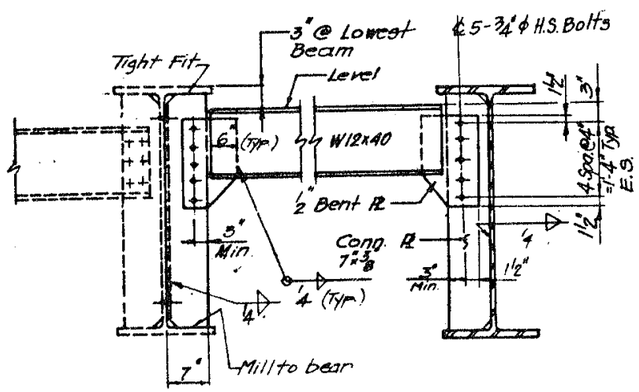

D 5

END DIAPHRAGM

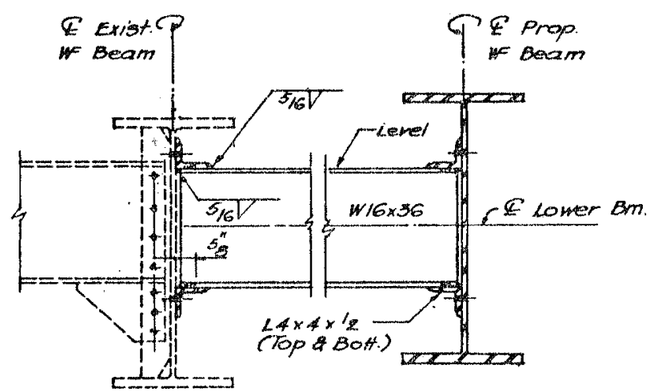

D 6

INTERIOR DIAPHRAGM

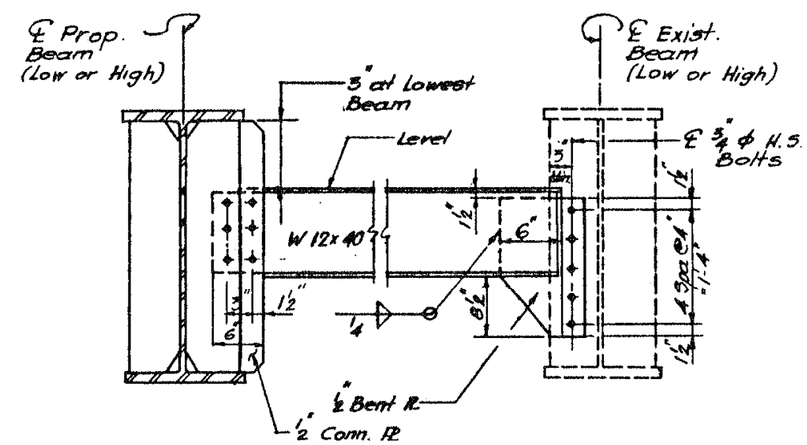

D 7

END DIAPHRAGM

FILE NAME =	USER NAME = aread	DESIGNED - AMR	REVISED -	STATE OF ILLINOIS DEPARTMENT OF TRANSPORTATION	DIAPHRAGM & CROSS FRAME DETAILS – LOCATION 2 STRUCTURE NO. 016-1117	F.A.I. RTE.	SECTION	COUNTY	TOTAL SHEETS	SHEET NO.
		DRAWN - AMR	REVISED -			90/94	2011-057-BP	COOK	98	52
	PLOT SCALE = 2.0000 ' / IN.	CHECKED - JMH	REVISED -					CONTRACT NO. 60P73		
	PLOT DATE = 3/29/2012	DATE - MARCH, 2012	REVISED -		SCALE: NTS / SHEET NO. 31 OF 39 SHEETS / STA. / TO STA.			ILLINOIS FED. AID PROJECT		

$FILEL$