DIGGERS
CHICAGO – UTILITY ALERT NETWORK
1–312–744–7000

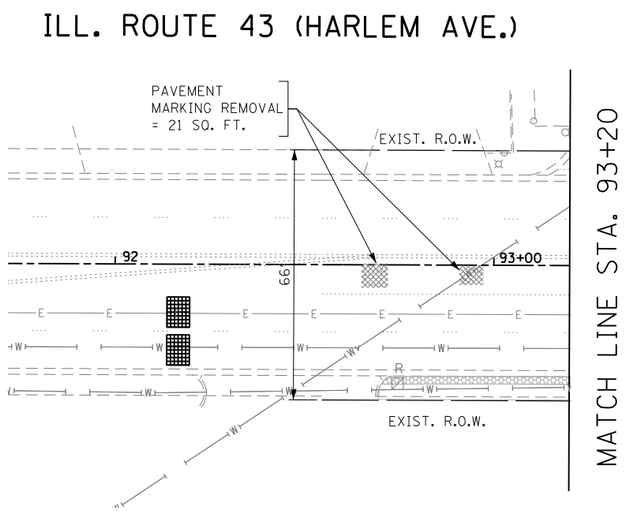

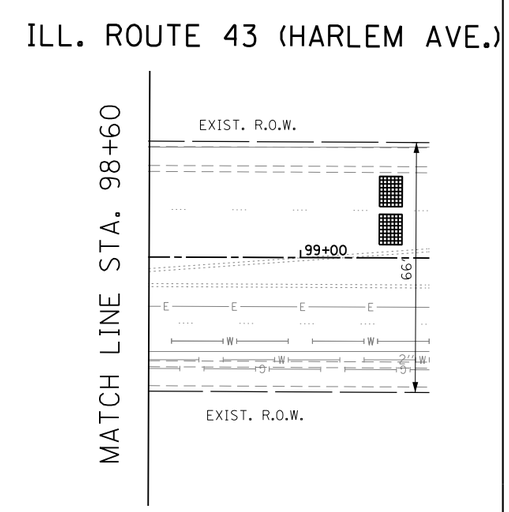

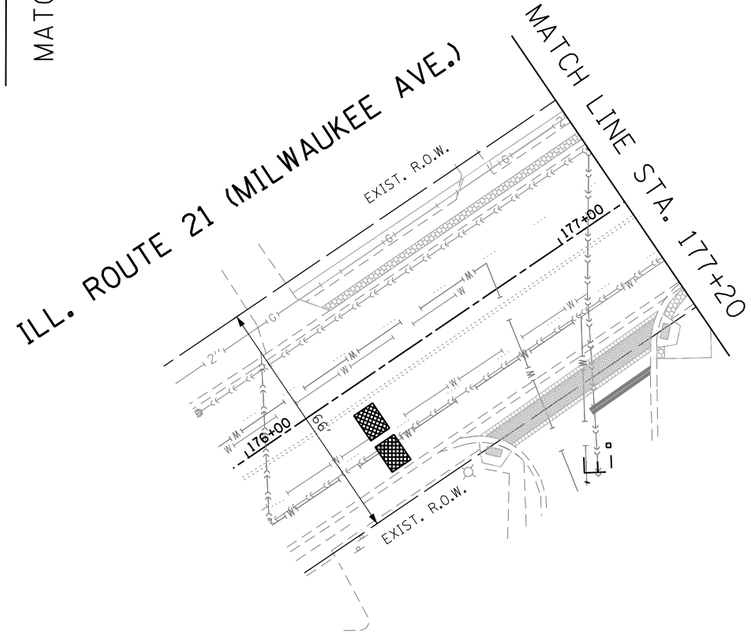

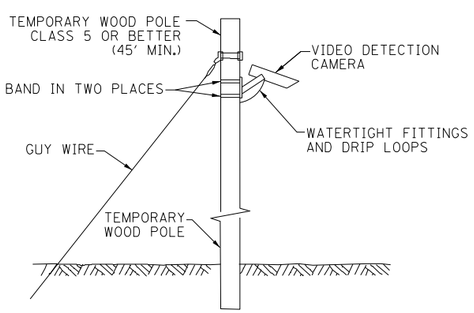

TEMPORARY VIDEO DETECTION
MOUNTING DETAIL
(NOT TO SCALE)

CONSTRUCTION NOTES

NOTE 1: THE VIDEO DETECTION ZONES SHOWN ON THE PLANS ARE FOR PRE-CONSTRUCTION STAGE AND SHALL BE REDEFINED FOR EACH CONSTRUCTION STAGE AS A PART OF "TEMPORARY TRAFFIC SIGNAL INSTALLATION" WORK.

NOTE 2: ALL STREETSCAPE WORK SHOWN IN "LIGHT GREY" WILL BE DONE "BY THE VILLAGE OF NILES" UNDER A SEPARATE CONTRACT. THE TRAFFIC SIGNAL CONTRACTOR SHALL COORDINATE CLOSELY WITH THE VILLAGE TO MINIMIZE CONFLICTS WITH THE STREETSCAPE WORK DURING CONSTRUCTION.

FILE NAME = $FILEL$	USER NAME = _GAI_	DESIGNED - MA, PKG	REVISED -
		DRAWN - EA, SM, MG	REVISED -
	PLOT SCALE = $SCALE$	CHECKED - PKG	REVISED -
	PLOT DATE = 3/21/2012	DATE - 03/21/2012	REVISED -

STATE OF ILLINOIS
DEPARTMENT OF TRANSPORTATION

TEMPORARY TRAFFIC SIGNAL INSTALLATION AND REMOVAL PLAN
ILL. RTE. 21 (MILWAUKEE AVE.) AT ILL. RTE. 43 (HARLEM AVE.)
PRE-STAGE (SHEET 2 OF 2)

SCALE: 1"=20' | SHEET NO. OF SHEETS | STA. TO STA.

F.A.U. RTE.	SECTION	COUNTY	TOTAL SHEETS	SHEET NO.
3513	2011-210-TS	COOK	089	015
	FINAL	CONTRACT NO. 60R44		

FED. ROAD DIST. NO. _ | ILLINOIS | FED. AID PROJECT