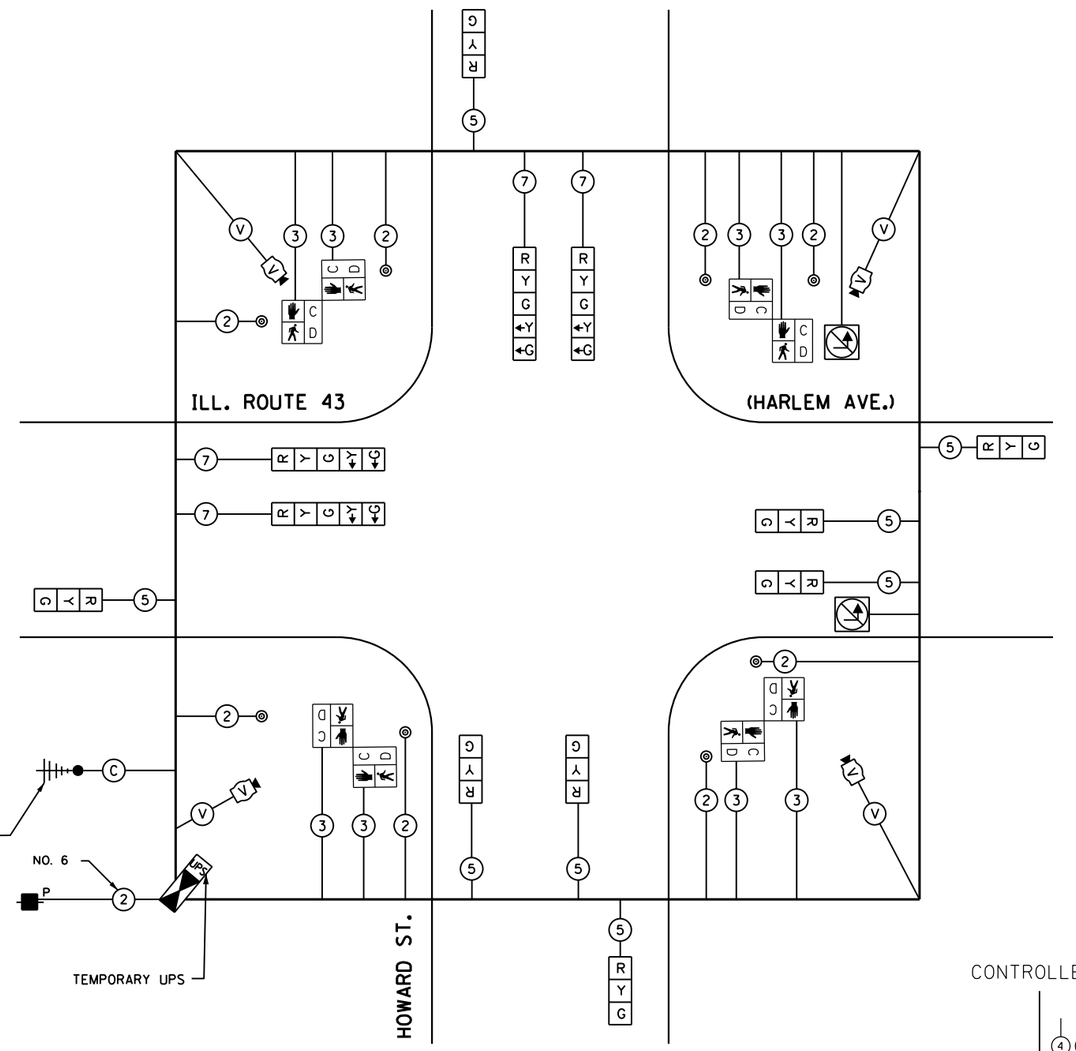

TEMPORARY CABLE PLAN

(NOT TO SCALE)

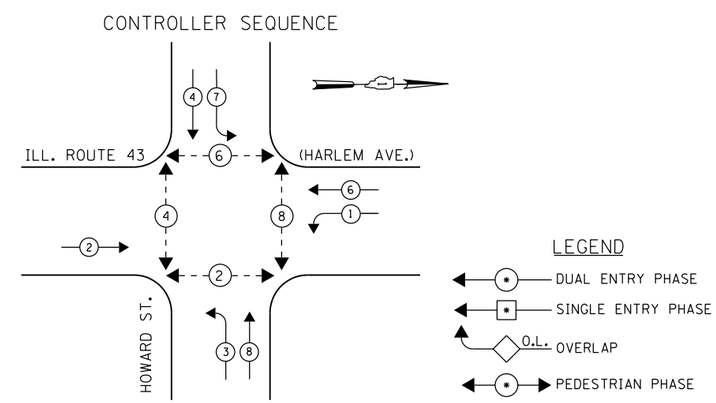

PHASE DESIGNATION DIAGRAM

I.D.O.T. TRAFFIC SIGNAL INSTALLATION ELECTRICAL SERVICE REQUIREMENTS					TOTAL WATTAGE
TYPE	NO LAMPS	WATTAGE INCAND.	WATTAGE LED	%OPERATION	
SIGNAL (RED)	12	135	17	0.50	102.0
(YELLOW)	12	135	25	0.25	75.0
(GREEN)	12	135	15	0.25	45.0
ARROW	8	135	12	0.10	9.6
PED. SIGNAL		90	25	1.00	
CONTROLLER	1	100	100	1.00	100.0
ILLUM. SIGN			25	0.05	
VIDEO SYSTEM	1	150		1.00	150.0
FLASHER				0.50	
ENERGY COSTS TO:				TOTAL =	481.6

ILLINOIS DEPARTMENT OF TRANSPORTATION
201 WEST CENTER COURT
SCHAUMBURG, ILLINOIS 60196-1096

ENERGY SUPPLY CONTACT: MAUREEN RAY
PHONE: (847) 816-5492
COMPANY: COMMONWEALTH EDISON

FILE NAME = $FILEL$	USER NAME = _GAI_	DESIGNED - MA, PKG	REVISED -
		DRAWN - EA, SM, MG	REVISED -
	PLOT SCALE = $SCALE$	CHECKED - PKG	REVISED -
	PLOT DATE = 3/21/2012	DATE - 03/21/2012	REVISED -

STATE OF ILLINOIS
DEPARTMENT OF TRANSPORTATION

TEMPORARY CABLE PLAN, PHASE DESIGNATION DIAGRAM
ILL. ROUTE 43 (HARLEM AVE.) AT HOWARD ST.

SCALE: NONE | SHEET NO. OF SHEETS | STA. TO STA.

F.A.P. RTE.	SECTION	COUNTY	TOTAL SHEETS	SHEET NO.
348	2011-210-TS	COOK	089	026
	FINAL	CONTRACT NO. 60R44		

FED. ROAD DIST. NO. _ | ILLINOIS | FED. AID PROJECT