ENTRANCE OF SIDEROAD IMPROVEMENT SCHEDULE

LOCATION (LT/RT) (STA)(+)	TYPE OF ENTRANCE (FE / PE / CE / MB)	EXIST MATERIAL (AGG./HMA/PCC/EARTH)	WIDTH "A" FOOT	WIDTH "B" FOOT	DISTANCE FROM EDGE OF PAVEMENT "C" FOOT	PCC SURF REMOVAL - BUTT JOINT SQ. YD.	HMA SURF REMOVAL - BUTT JOINT SQ. YD.	PR HMA CONC. THICKNESS INCH	AGG. SURF. COURSE, TYPE B TON	INCIDENTAL HMA SURF. TON	AGGREGATE MATERIALS (PRIME COAT) TON	BITUMINOUS MATERIALS (PRIME COAT) TON
BEGINNING OF PROJECT IL 104 (AUBURN)												
RT. STA. 524+12	CE	PCC	68	54	7	47.44		1.75		4.65	0.09	0.02
LT. STA. 525+49	CE	HMA	92	65	4		34.89	1.75		3.42	0.07	0.01
RT. STA. 525+94	S. CLOVER LANE	HMA	66	42	10		60.00	1.75		5.88	0.12	0.02
LT. STA. 527+32	CE	PCC	91	69	7	62.22		1.75		6.10	0.12	0.02
RT. STA. 528+85	FE	PCC	68	60	7	49.78		1.75		4.88	0.10	0.02
RT. STA. 529+82	FE	PCC	74	62	7	52.89		1.75		5.18	0.11	0.02
LT. STA. 529+96	CE	PCC	83.3	68	7	58.84		1.75		5.77	0.12	0.02
LT. STA. 532+35	CE	PCC	85	67.5	7	59.31		1.75		5.81	0.12	0.02
RT. STA. 533+74	FE	PCC	66.5	47.8	7	44.45		1.75		4.36	0.09	0.02
LT. STA. 533+74	S. IRIS DRIVE	HMA	81	53	10		74.44	1.75		7.30	0.15	0.03
LT. STA. 535+76	FE	PCC	71.5	57	7	49.97		1.75		4.90	0.10	0.02
LT. STA. 563+80	DIXON ROAD	HMA	70	42	10		62.22	1.75		6.10	0.12	0.02
RT. STA. 563+80	DIXON ROAD	HMA	79	42.8	10		67.67	1.75		6.63	0.14	0.03
LT. STA. 564+80	PE	HMA	57	49	4		23.56	1.75		2.31	0.05	0.01
LT. STA. 566+52	CE	HMA	83	68	4		33.56	1.75		3.29	0.07	0.01
LT. STA. 577+84	PE	HMA	66.5	50.6	4		26.02	1.75		2.55	0.05	0.01
LT. STA. 580+82	PE	AGG	76	60	4				2.58			
RT. STA. 581+45	PE	AGG	44.6	35	4				1.51			
LT. STA. 584+40	CE	AGG	72.7	58.6	4				2.49			
RT. STA. 587+73	PE	PCC	49	40	7	34.61		1.75		3.39	0.07	0.01
LT. STA. 589+88	BAB ROAD	HMA	97	65	10		90.00	1.75		8.82	0.18	0.03
RT. STA. 589+88	BAB ROAD	HMA	72.5	36.8	10		60.72	1.75		5.95	0.12	0.02
LT. STA. 592+50	PE	AGG	51.5	41.5	4				1.77			
LT. STA. 594+70	PE	AGG	133.68	110.2	4				4.63			
LT. STA. 600+53	PE, M.B.	AGG	65	35	8			1.75		6.00	0.15	0.02
LT. STA. 603+91	PE, M.B.	AGG	65	35	8			1.75		6.00	0.15	0.02
RT. STA. 641+51	FE	EARTH	48	32	7							
LT. STA. 643+88	MOOSE CRY RD.	HMA	74.9	39	10		63.28	1.75		6.20	0.13	0.02
RT. STA. 655+00	KESSLER ROAD	HMA	74	51.5	10		69.72	1.75		6.83	0.14	0.03
LT. STA. 668+25	DAWSON ROAD	HMA	91	71.9	10		90.50	1.75		8.87	0.18	0.03
LT. STA. 708+15	PURDON ROAD	HMA	65.9	55.9	10		67.67	1.75		6.63	0.14	0.03
RT. STA. 708+15	PURDON ROAD	HMA	86.5	68.1	10		85.89	1.75		8.42	0.17	0.03
LT. STA. 741+01	PE	HMA	61	53	4		25.33	1.75		2.48	0.05	0.01
LT. STA. 743+20	PE	HMA	49.6	40	4		19.91	1.75		1.95	0.04	0.01
RT. STA. 743+26	PE	AGG	79	61.6	7				4.67			
LT. STA. 745+00	CE	PCC	75.12	62.1	7	53.36		1.75		5.23	0.11	0.02
STA. EQUATION: STA. 746+90.47 (BK) = STA. 71+63.54 (AHD)												
RT. STA. 73+44	CE	HMA	131.5	121	4		56.11	1.75		5.50	0.11	0.02
LT. STA. 78+00	CE	AGG							0.00			
LT. STA. 79+50	CE	PCC				0.00		1.75		0.00	0.00	0.00
LT STA. 82+48	CE	PCC				0.00		1.75		0.00	0.00	0.00
LT. STA. 84+50	FRAZEE RD.	HMA	171	136	10		170.56	1.75		16.71	0.34	0.06
STA. EQUATION: STA. 124+73.26 (BK) = STA. 802+78.33 (AHD)												
LT. STA. 804+66	FE	EARTH	102.2	81.3	7							
LT. STA. 858+05	S. COMANCHE RD.	HMA	61.3	42.1	10		57.44	1.75		5.63	0.11	0.02
RT. STA. 858+06	S. COMANCHE RD.	HMA	71.7	50.9	10		68.11	1.75		6.67	0.14	0.03
RT. STA. 884+43	SHEEDY ROAD	HMA	138.8	94.2	10		129.44	1.75		12.69	0.26	0.05
LT. STA. 890+65	CE	PCC	130.1	108.8	7	92.91		1.75		9.10	0.19	0.04
LT. STA. 896+53	FE	AGG	26.6	23.6	7							
RT. STA. 909+34	PE	HMA	144.9	123.42	4		59.63	1.75		5.84	0.12	0.02
LT. STA. 910+05	PE	AGG	41.6	30	7				2.38			
LT. STA. 911+45	PE, M.B.	AGG	33.7	15.3	8			1.75		6.00	0.15	0.02
RT. STA. 912+30	CE	AGG	55.7	44	7				3.31			
RT. STA. 926+00	FE	AGG	64.1	50.2	7				3.80			
RT. STA. 933+56	FE	EARTH	50	39.8	7							
END OF PROJECT IL 104 (PAWNEE)												
TOTAL						605.8	1496.7		27.1	224.0	4.7	0.9

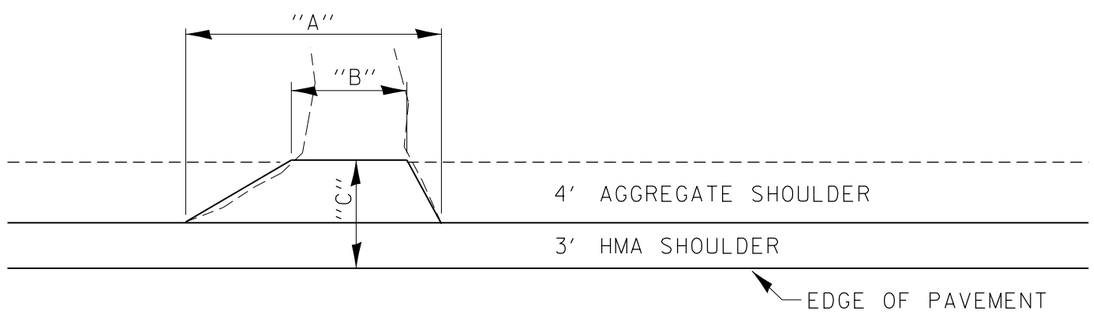

FILE NAME = c:\pw_work\pwidot\sparksgw\d0245433\D672E12-sht-schedule.dgn	USER NAME = sparksgw	DESIGNED -	REVISED -
		DRAWN -	REVISED -
	PLOT SCALE = 100.0000 ' / in.	CHECKED -	REVISED -
	PLOT DATE = Apr-09-2012 03:33:18PM	DATE -	REVISED -

STATE OF ILLINOIS
DEPARTMENT OF TRANSPORTATION

SCHEDULE OF QUANTITIES

SCALE: | SHEET 6 OF 8 SHEETS | STA. TO STA.

F.A.P RTE.	SECTION	COUNTY	TOTAL SHEETS	SHEET NO.
753	(14ORS-6, 14IRS-7)I	SANGAMON	98	25

CONTRACT NO. 72E12

ILLINOIS FED. AID PROJECT