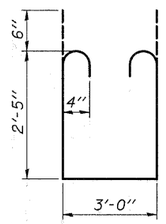

BAR s_1(E)

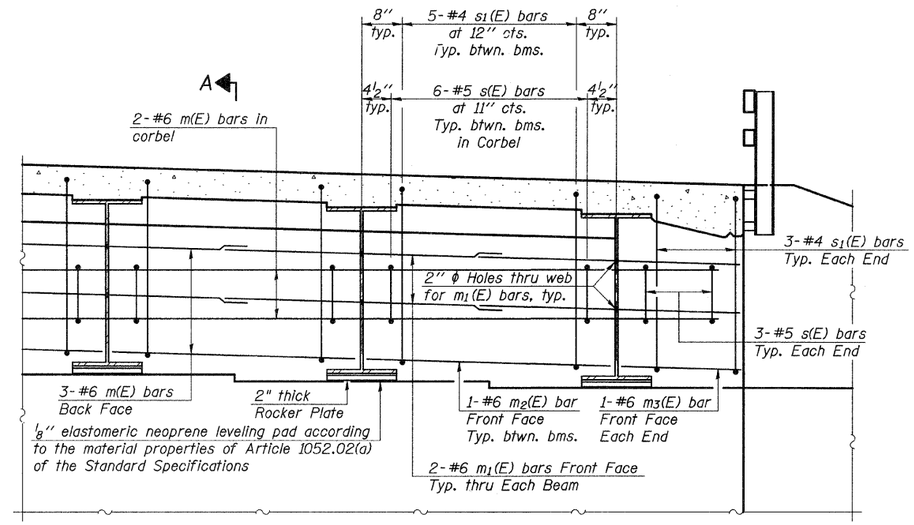

DIAPHRAGM ELEVATION AT ABUTMENT

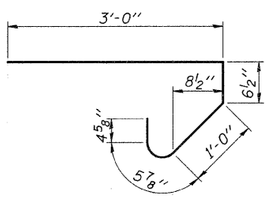

BAR s(E)

Notes:
Reinforcement bars in diaphragm are billed with superstructure on sheet 6 of 21.
Concrete in diaphragm is included with Concrete Superstructure on sheet 6 of 21.
The s(E) and s_1(E) bars shall be placed parallel to the beams. Spacing for these bars shall be at right angles to the beams.

MIN. BAR LAP

#6 bar = 3'-4"

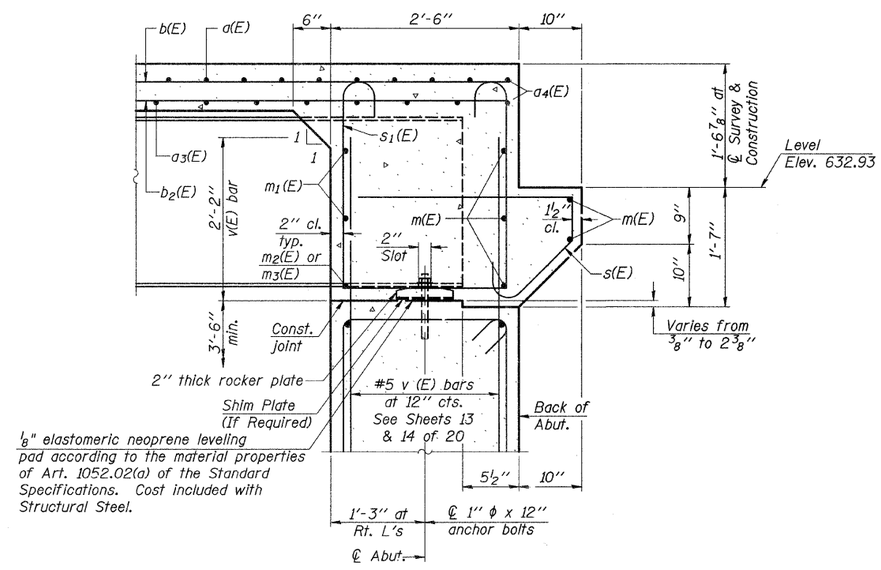

SECTION A-A

Dimensions at right angles to abutment, except as shown.

Work this Sheet with Sheet 6 of 21.

SUPERSTRUCTURE DETAILS

S.N. 038-4558

DESIGNED -	A.L.S.
CHECKED -	A.R.K.
DRAWN -	S.A.P.
CHECKED -	A.L.S. & A.R.K.

FEHR-GRAHAM & ASSOCIATES, LLC
ENGINEERING AND SCIENCE CONSULTANTS
FREEPORT, IL ROCKFORD, IL ROCHELLE, IL MONROE, WI SPRINGFIELD, IL
4440 ASH GROVE SPRINGFIELD, IL 62711 (217)-793-8600 www.fehr-graham.com

TWP. RTE.	SECTION	COUNTY	TOTAL SHEETS	SHEET NO.
55B	07-16121-00-BR	IROQUOIS	33	11
		CONTRACT NO. 87487		
MARTINTON ROAD DIST.	ILLINOIS	F.A. PROJ. BROS-075(145)		

FILE: DATE: 04/18/11

*09-203