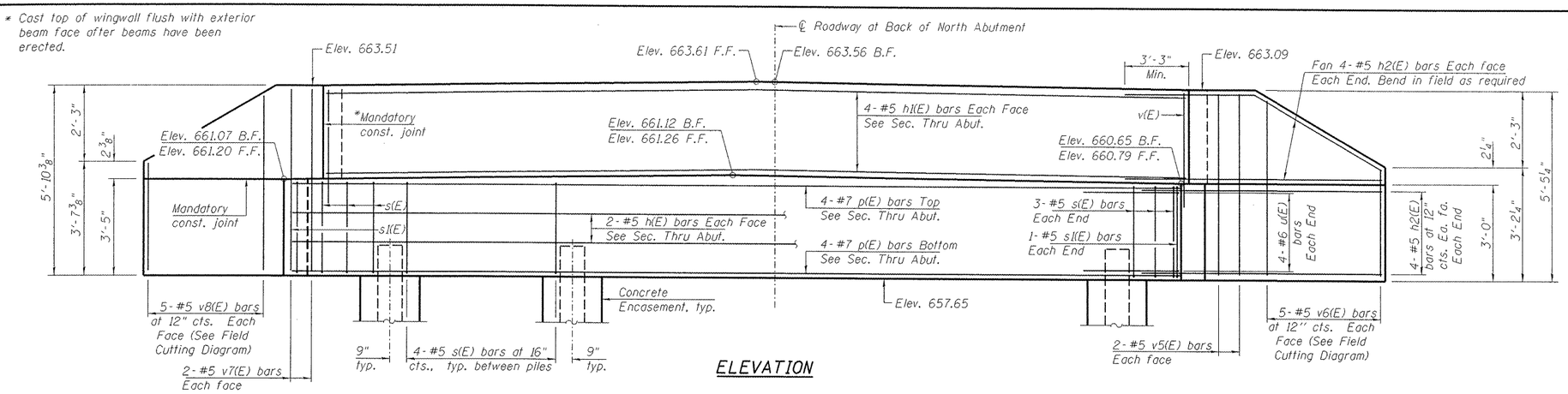

ELEVATION

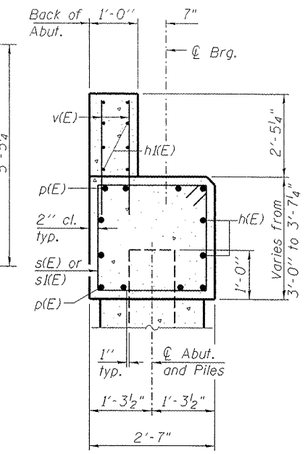

SECTION A-A

(Dimensions are at Rt. L's)

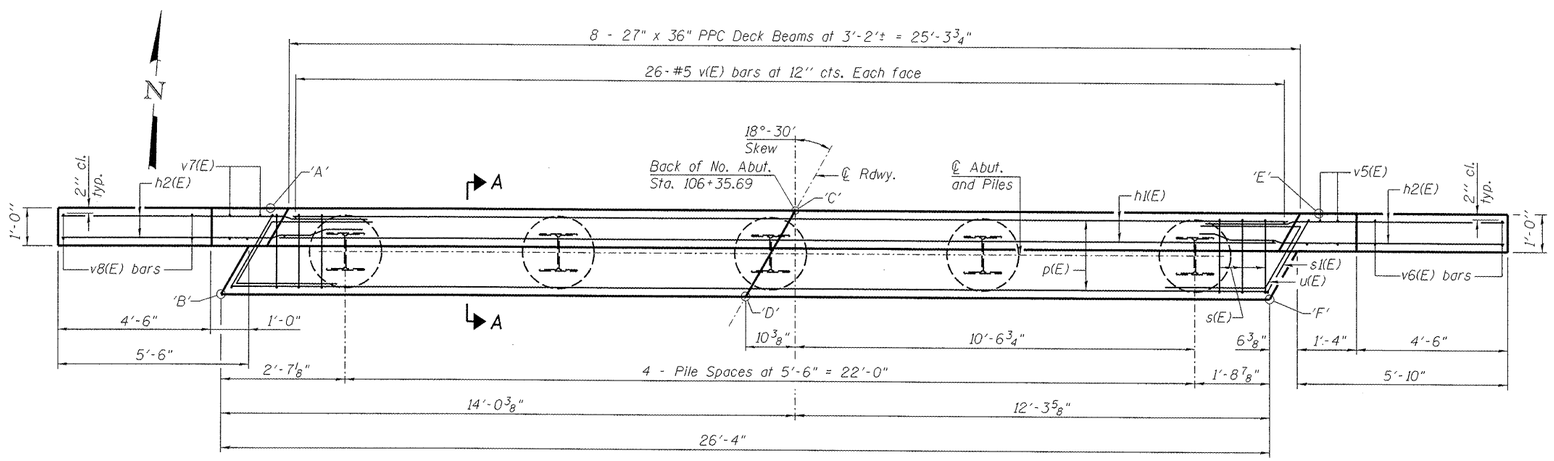

PLAN

BILL OF MATERIAL

Bar	No.	Size	Length	Shape
h(E)	4	#5	26'-0"	
h1(E)	8	#5	25'-0"	
h2(E)	32	#5	10'-0"	
p(E)	8	#7	26'-0"	
s(E)	22	#5	10'-9"	
s1(E)	2	#5	11'-0"	
u(E)	8	#6	13'-1"	
v(E)	52	#5	4'-10"	
v5(E)	4	#5	5'-1"	
v6(E)	5	#5	8'-2"	
v7(E)	4	#5	5'-6"	
v8(E)	5	#5	9'-0"	
Structure Excavation			Cu. Yd.	58
Concrete Structures			Cu. Yd.	13.0
Reinforcement Bars, Epoxy Coated			Pound	1900
Furnishing Steel Piles HP12x53			Foot	128
Driving Piles			Foot	128
Test Pile Steel HP12x53			Each	1
Pile Shoes			Each	5
Concrete Encasement			Cu. Yd.	1.7

PILE DATA

Type:	HP12x53
Nominal Required Bearing:	419 Kips
Factored Resistance Available:	230 Kips
Est. Length:	32 Feet
No. Production Piles:	4 (with pile shoes)
No. Test Piles:	1 (with pile shoes)

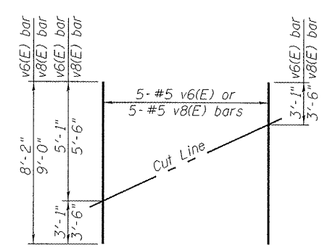

FIELD CUTTING DIAGRAM

Order v6(E) and v8(E) bars full length. Cut as shown and use remainder of bars in opposite face.

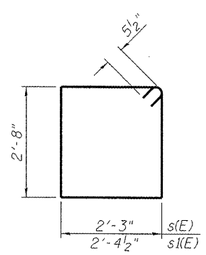

BARS s(E) & s1(E)

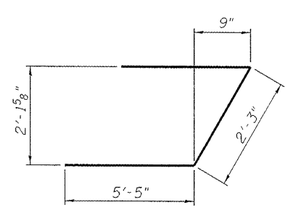

BAR u(E)

ELEVATIONS TOP of PILE CAP

Point	Elevation
'A'	661.07
'B'	661.20
'C'	661.12
'D'	661.26
'E'	660.65
'F'	660.79

Notes:

For details of piles and Concrete Encasement, see sheet 12 of 15.

Cast backwall after beams have been erected, and before HMA Wearing surface has been placed.

B.F. = Back Face

F.F. = Front face

HANSON
PROFESSIONAL DESIGN FIRM LICENSE #184-001084
© Copyright Hanson Professional Services Inc. 2011

FILE NAME =	USER NAME =	DESIGNED - MNM	REVISED -	STATE OF ILLINOIS DEPARTMENT OF TRANSPORTATION	NORTH ABUTMENT STRUCTURE NO. 048-9927
		CHECKED - JGT	REVISED -		
	PLOT SCALE =	DRAWN - Rod	REVISED -		
	PLOT DATE =	CHECKED - TEH	REVISED -		SHEET NO. 09 OF 15 SHEETS

F.A. RTE.	SECTION	COUNTY	TOTAL SHEETS	SHEET NO.
TR 176	05-15103-00-BR	KNOX	97	35
		CONTRACT NO. 89429		
		ILLINOIS FED. AID PROJECT	BROS 0095 128	