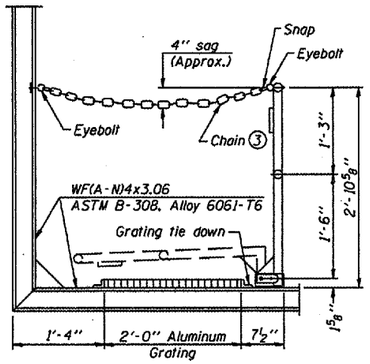

SIDE ELEVATION
(Showing Safety Chain W/O Sign)

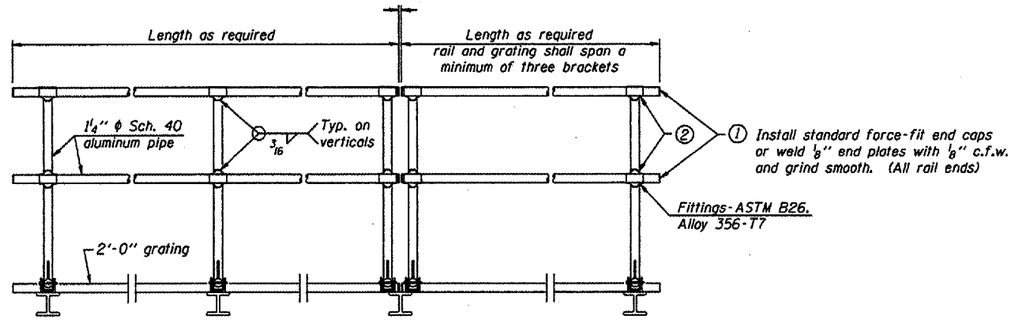

FRONT ELEVATION

② Horizontal handrail member shall be continuous thru fitting. Provide 7/16" ϕ hole in fitting for ⅜" ϕ bolt. Field drill 7/16" ϕ hole in horizontal rail member. Provide locknut and two stainless steel washers for bolt. (Use 5/16" eyebolts in 7/16" ϕ holes on top rail at ends only.)

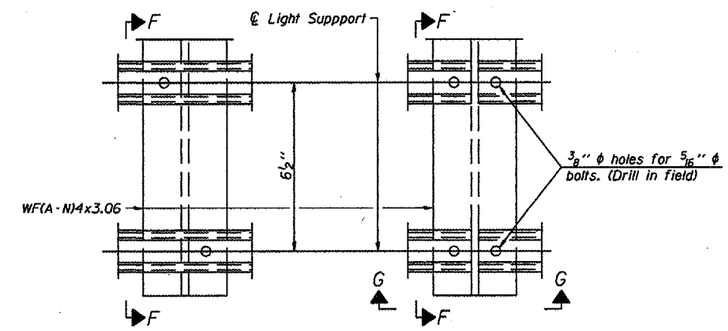

DETAIL F

DETAIL G

HANDRAIL DETAILS

Handrail pipe shall be ASTM B241, Alloy 6063-T6 or Alloy 6061-T6.

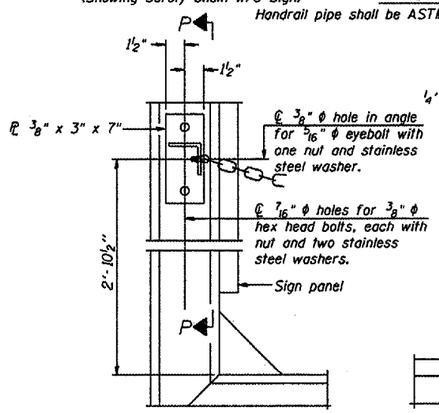

ALTERNATE SAFETY CHAIN ATTACHMENT
(With Sign Present)
Items not shown same as "Side Elevation" of "Handrail Details"

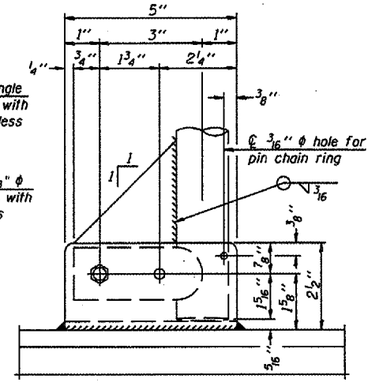

SIDE ELEVATION

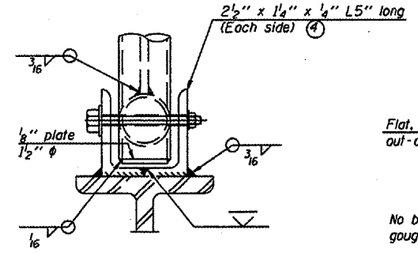

FRONT ELEVATION
Details not shown same as "ELEVATION" at right.

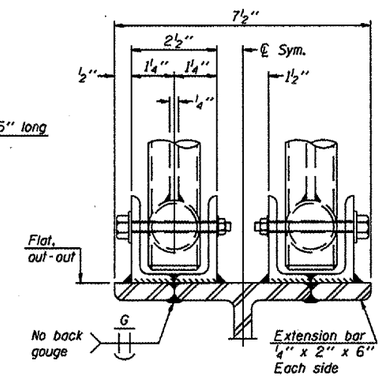

ELEVATION AT HANDRAIL JOINT ④
Details not shown same as "FRONT ELEVATION"

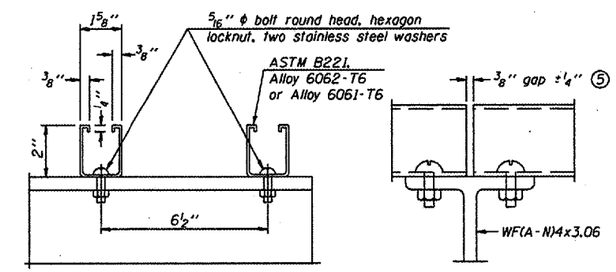

SECTION F-F

SECTION G-G

LIGHTING FIXTURE MOUNTS (IF REQUIRED)

⑤ Field cut ends of light support channels shall be free of burrs or hazardous projections and coated with zinc-rich primer or equivalent.

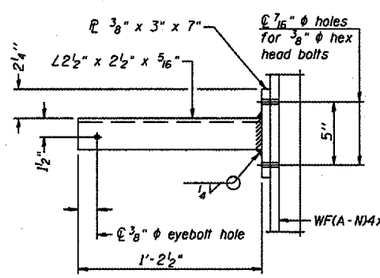

SECTION P-P

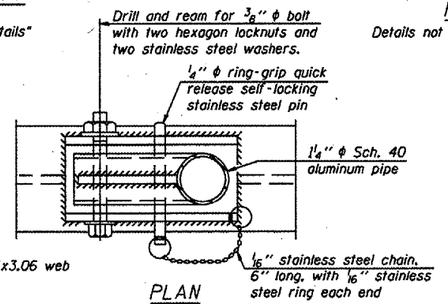

PLAN

DETAIL E HANDRAIL HINGE

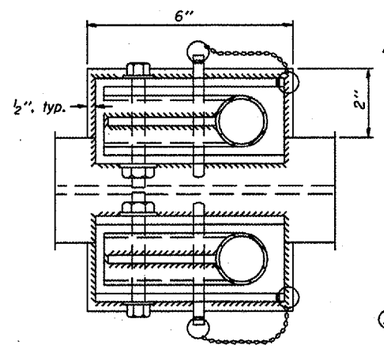

PLAN AT HANDRAIL JOINT
Details not shown same as "PLAN"

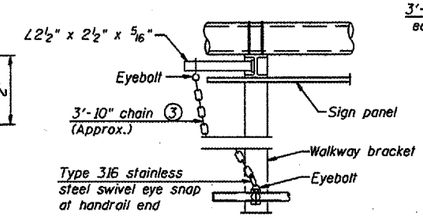

ALTERNATE SAFETY CHAIN ATTACHMENT
Details not shown similar to "Safety Chain" Details
(Walkway omitted for clarity)

③ 3/16 " Type 304L or 316L Stainless Steel, approximately 12 links per foot.

④ Extrusions may be used in lieu of the details shown, with approval of the Engineer.

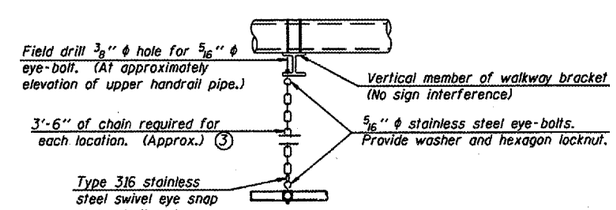

SAFETY CHAIN
One required for each end of each walkway.

NUMBER	REVISION	DATE

DESIGNED -
CHECKED -
DRAWN -
CHECKED -

- 20
EXAMINED
ENGINEER OF BRIDGE DESIGN
PASSED
ENGINEER OF BRIDGES AND STRUCTURES

OSC-A-8 1-7-05

CANTILEVER SIGN STRUCTURES
HANDRAIL DETAILS
ALUMINUM TRUSS & STEEL POST

District 7
Overhead Sign Structure
Repair and Replacement