F.A.U. RTE.	SECTION	COUNTY	TOTAL SHEETS	SHEET NO.
3520	2005-001 RS	COOK	37	7
STA.		TO STA.		
FED. ROAD DIST. NO. 1	ILLINOIS	FED. AID PROJECT		

CONTRACT NO. 62903

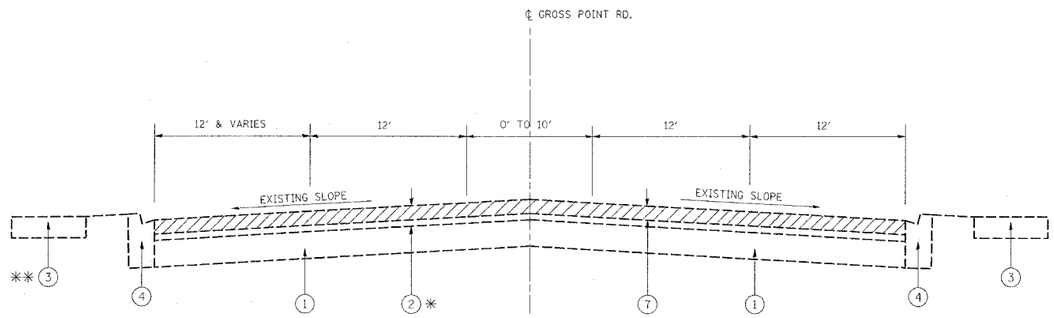

EXISTING TYPICAL SECTION
GROSS POINT ROAD

STATION
78+86 TO 82+70

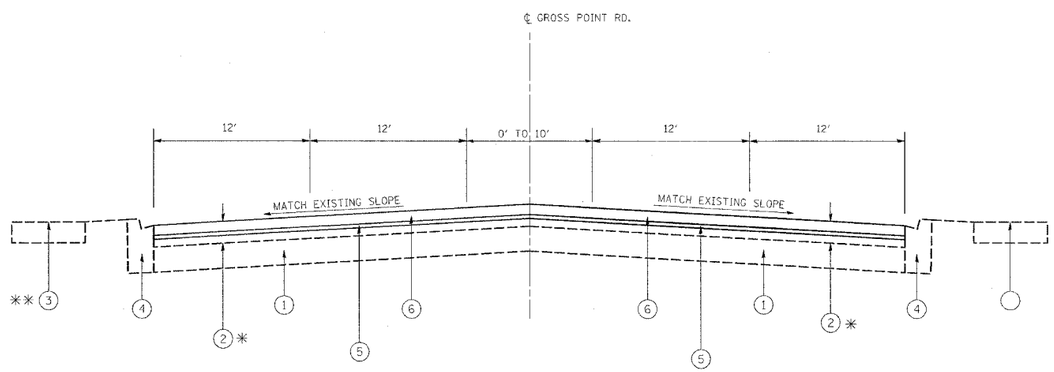

PROPOSED TYPICAL SECTION
GROSS POINT ROAD

STATION
78+86 TO 82+70

LEGEND

1. EXISTING PCC BASE COURSE, 10"(±)
2. * EXISTING BIT. CONCTRETE SURFACE COURSE, 3"(±)
3. ** EXISTING PCC SIDEWALK, 5"
4. EXISTING TYPE B-6.24 CURB & GUTTER
5. PROPOSED POLYMERIZED LEVELING BINDER (MM), SUPERPAVE, IL-4.75, N50, 3/4 "
6. PROPOSED POLYMERIZED BIT. CONC. SURFACE COURSE, SUPERPAVE, MIX "F", N90, 1 3/4"
7. BITUMINOUS SURFACE REMOVAL - 2 1/2 "

NOTES:

* OAKTON ST. - EXISTING BIT. CONCRETE SURFACE COURSE, 6"(±)

** NO SIDEWALK FROM 78+86 TO OAKTON ST. ON LEFT

REVISIONS	
NAME	DATE

ILLINOIS DEPARTMENT OF TRANSPORTATION

GROSS POINT RD.
EXISTING AND PROPOSED
TYPICAL SECTIONS

SCALE: VERT. HORIZ. NONE

DATE

DRAWN BY

CHECKED BY

PLOT DATE = 3/24/2006
FILE NAME = c:\pro_jects\p1848596\p1848596sa.m32
PLOT SCALE = 50.000 ' / IN.
REFERENCE = REF

...\projects\p1848596\p1848596sa.m32 3/24/2006 8:14:35 AM Bernal\Graphics