CONTRACT NO. 66611

F.A.* RTE.	SECTION	COUNTY	TOTAL SHEETS	SHEET NO.
*	(2Z) N & TS-3	MARSHALL	21	13
STA. _____	TO STA. _____			
FED. ROAD DIST. NO. _	ILLINOIS	FED. AID PROJECT		

* FAP 649 (IL 17) & FAS 2370 (IL 26)

CONTROLLER SEQUENCE

NAME OF INTERSECTION: IL 17 AND IL 26

CONTROLLER SPECIFIED: FULL-ACTUATED CONTROLLER, STANDARD SEQUENCE II, 8 PHASE, IN TYPE IV CABINET REFERRING TO STANDARD 857001, THE VEHICULAR AND PEDESTRIAN PHASES USED ARE DESIGNATED.

LEGEND

VEHICULAR MOVEMENT

PEDESTRIAN MOVEMENT

✳ NUMBER REFERS TO ASSOCIATED PHASE

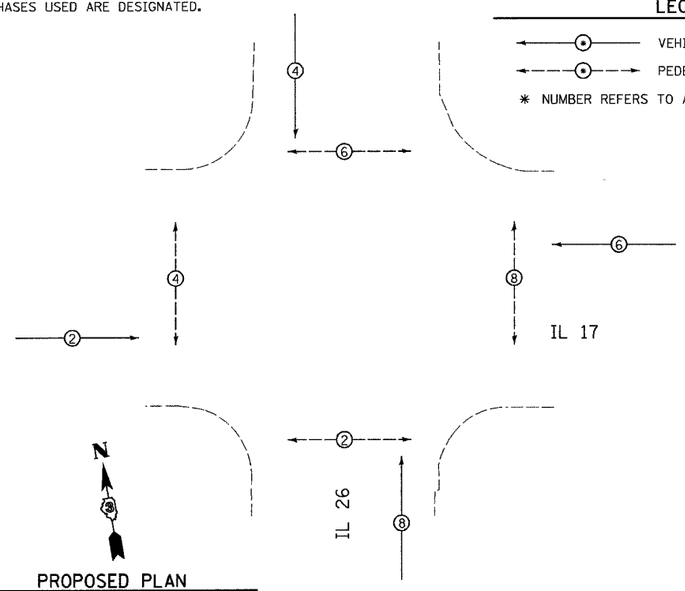

PROPOSED PLAN
NOT TO SCALE

TRAFFIC SIGNALS LEGEND

- PROP. CONTROLLER CABINET
- PROP. LIGHTING CONT. PHOTOCELL RELAY
- EXISTING SERVICE INSTALLATION
- PROP. 3 SEC. SIGNAL HEAD W/ BACKPLATE
- (5) 5/C NO. 14 SIGNAL CABLE
- (7) 7/C NO. 14 SIGNAL CABLE
- (3) 3/C NO. 14 SIGNAL CABLE
- (3P) 3 PAIR NO. 18 LEAD-IN CABLE
- (1) (1/C NO. 6) x 3 ELECTRIC CABLE
- PROP. PEDISTRIAN SIGNAL HEAD
- PROP. PEDESTRIAN PUSH BUTTON
- DETECTOR LOOP
- (G) GROUND CABLE IN CONDUIT, NO. 6 XLP-USE (GREEN)
- (C) CONTINUOUS SYSTEM GROUND TO CONTROLLER (C), POST (P), MAST ARM (MA), OR SERVICE (S)

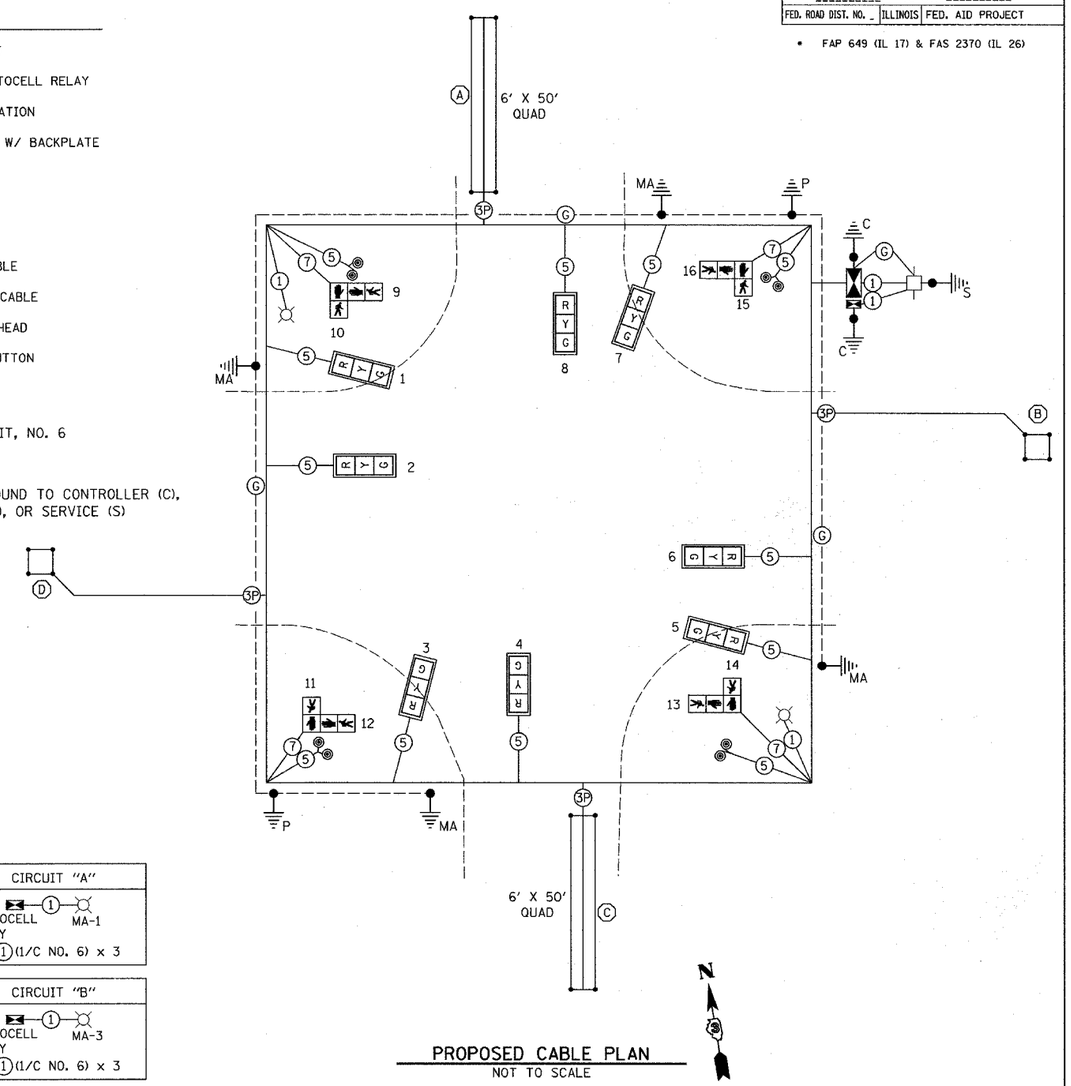

CIRCUIT "A"
PHOTOCELL RELAY — (1) — MA-1
(1) (1/C NO. 6) x 3

CIRCUIT "B"
PHOTOCELL RELAY — (1) — MA-3
(1) (1/C NO. 6) x 3

PROPOSED CABLE PLAN
NOT TO SCALE

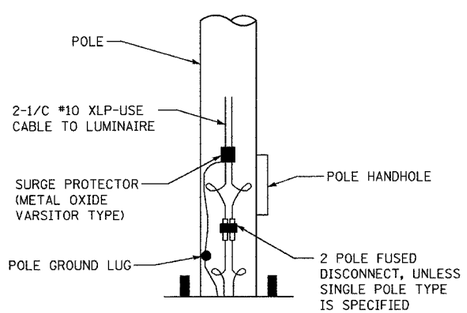

OVER HEAD LIGHTING ELECTRIC CABLE SHALL BE 2-1/C #6 XLP/USE AND 1-1/C #6 XLP/USE GREEN INSULATION (FOR GROUND) PER STANDARD 1076.01.

PEDESTRIAN CROSSING SIGN DETAIL

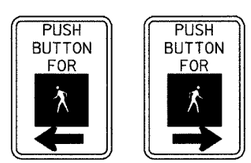

DIMENSIONS: 12" (TYP) X 9" (TYP)
LEGEND AND BORDER: NON-REFLECTORIZED BLACK
BACKGROUND: NON-REFLECTORIZED WHITE

ONE SIGN SHALL BE PROVIDED FOR EACH PUSH-BUTTON. ORIENTATION OF DIRECTIONAL ARROWS TO BE DETERMINED BY PUSH-BUTTON LOCATION

ALL MOUNTING HARDWARE SHALL BE STAINLESS STEEL CONSTRUCTION. ALL MOUNTING BOLTS SHALL BE HEX HEAD.

MATERIALS AND INSTALLATION OF THIS SIGN SHALL BE INCLUDED IN THE COST OF PEDESTRIAN PUSH-BUTTON.

CABLE NOTES

1. ALL PEDESTRIAN INDICATIONS SHALL UTILIZE INTERNATIONAL HAND/WALK PERSON SYMBOLS.
2. ALL TRAFFIC SIGNAL MAST ARMS, POSTS, HANDHOLES (LIDS, RINGS, FRAMES), PEDESTRIAN PUSH-BUTTON POSTS, CABINETS, AND PHOTOCELL RELAY SHALL BE GROUNDED IN ACCORDANCE WITH NEC REQUIREMENTS.

REVISIONS	
NAME	DATE

ILLINOIS DEPARTMENT OF TRANSPORTATION

TRAFFIC SIGNAL PLAN
FAP 649 (IL 17) - FIFTH STREET AND
FAS 2370 (IL 26) - PRARIE STREET
SECTION (2Z) N & TS-3
MARSHALL COUNTY

SCALE: VERT. 1" = 20'
HORIZ. 1" = 20'

DATE

DRAWN BY ARR

CHECKED BY MVF

PLOT DATE = $DATE$
FILE NAME = $FILEL$
PLOT SCALE = $SCALE$
USER NAME = $USER$