F.A.U. RTE.	SECTION	COUNTY	TOTAL SHEETS	SHEET NO.
3580	04-00043-00-TL	WILL	54	34
STA.	TO STA.			
FED. ROAD DIST. NO.	ILLINOIS	FED. AID PROJECT		

CONTRACT NO.: 83855

CONTROLLER SEQUENCE

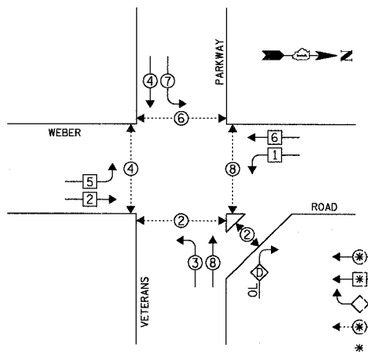

LEGEND

- DUAL ENTRY PHASE
- SINGLE ENTRY PHASE
- OVERLAP
- PEDESTRIAN PHASE
- * NUMBER REFERS TO ASSOCIATED PHASE

PHASE DESIGNATION DIAGRAM

RIGHT TURN OVERLAP PHASE DESIGNATION

OVERLAP LETTER		PERMISSIVE PHASE		PROTECTED PHASE
D	=	8	+	1

EMERGENCY VEHICLE PREEMPTION SEQUENCE

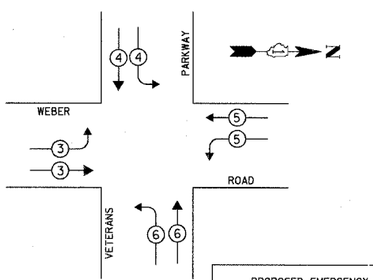

PROPOSED EMERGENCY VEHICLE PREEMPTORS				
EMERGENCY VEHICLE PREEMPTOR	3	4	5	6
MOVEMENT				

SCHEDULE OF QUANTITIES		
ITEM	UNIT	TOTAL
SIGN PANEL - TYPE 1	SQ FT	20
FULL-ACTUATED CONTROLLER AND TYPE V CABINET, SPECIAL	EACH	1
MAINTENANCE OF EXISTING TRAFFIC SIGNAL INSTALLATION	EACH	1
TRANSCEIVER - FIBER OPTIC	EACH	1
INDUCTIVE LOOP DETECTOR	EACH	12
RELOCATE EXISTING EMERGENCY VEHICLE PRIORITY SYSTEM, PHASING UNIT	EACH	1
REMOVE EXISTING TRAFFIC SIGNAL EQUIPMENT	EACH	1
UNINTERRUPTIBLE POWER SUPPLY, STANDARD	EACH	1

THE FOLLOWING EXISTING TRAFFIC SIGNAL EQUIPMENT SHALL BE REMOVED BY THE CONTRACTOR, SHALL REMAIN THE PROPERTY OF THE OF THE VILLAGE OF BOLINGBROOK, AND SHALL BE DELIVERED BY THE CONTRACTOR TO THE VILLAGE YARD AS PER THE TRAFFIC SIGNAL SPECIFICATIONS.

1 EACH CONTROLLER AND CABINET (COMPLETE)

THE FOLLOWING ITEMS SHALL BE REMOVED BY THE CONTRACTOR AND SHALL BE DISPOSED OF BY THEM OUTSIDE THE RIGHT-OF-WAY AT THEIR EXPENSE. THE SALVAGE VALUE OF THE REMOVED EQUIPMENT SHALL BE REFLECTED IN THE CONTRACT BID PRICE.

4 EACH SIGN PANEL - TYPE 1

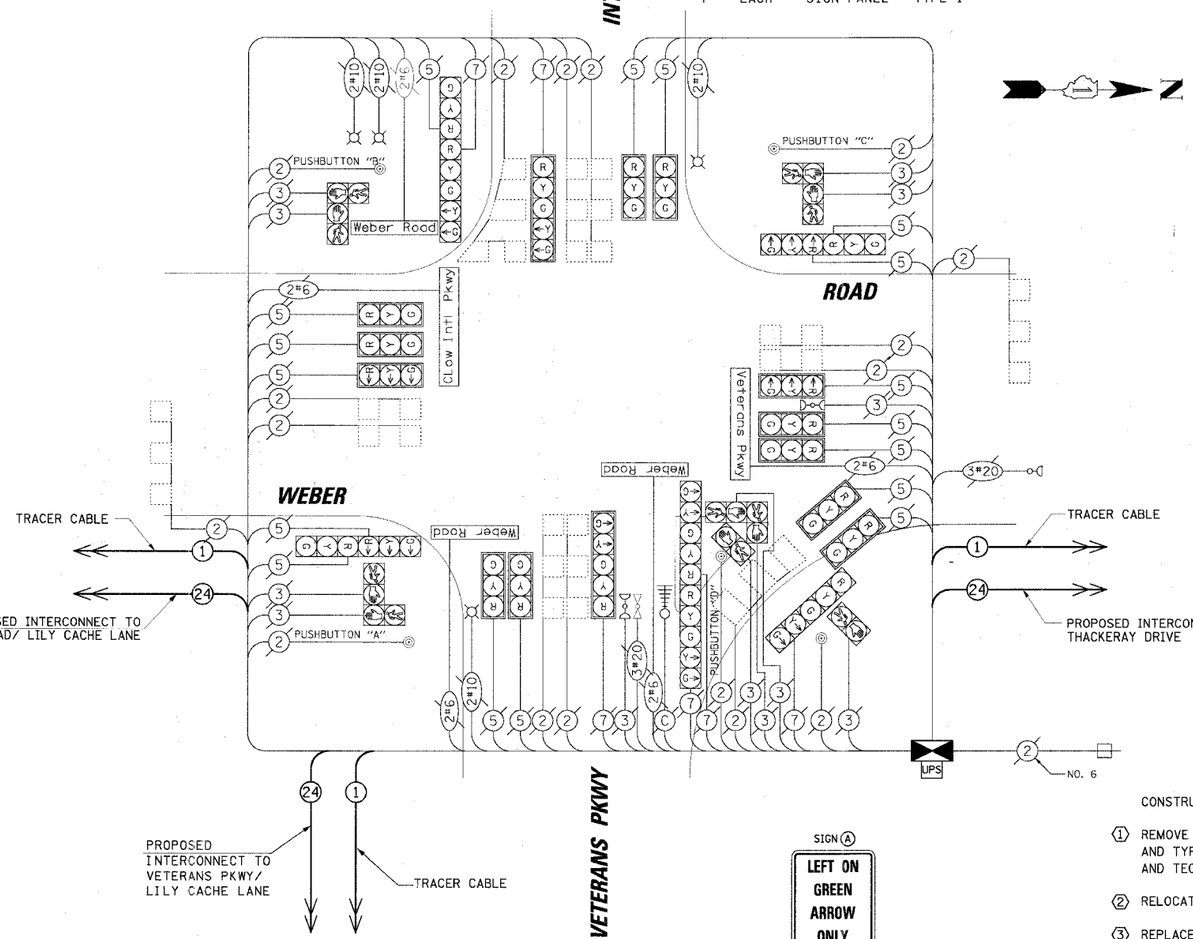

CABLE PLAN LEGEND

EXISTING	PROPOSED	
G	G	8" (200mm) TRAFFIC SIGNAL SECTION
R	R	12" (300mm) TRAFFIC SIGNAL SECTION
W	W	12" (300mm) PEDESTRIAN SIGNAL SECTION
		12" (300mm) PEDESTRIAN SIGNAL SECTION
		CONTROLLER CABINET
		SERVICE INSTALLATION
T	T	TELEPHONE INSTALLATION
		VEHICLE DETECTOR, INDUCTION LOOP
		MAGNETIC DETECTOR
		EMERGENCY VEHICLE LIGHT DETECTOR
		CONFIRMATION BEACON
		PUSHBUTTON DETECTOR
2	2	DENOTES NUMBER OF CONDUCTORS. ALL CABLE NO. 14 EXCEPT AS INDICATED. ALL LOOP DETECTOR CABLE TO BE SHIELDED.
1	1	GROUND CABLE IN CONDUIT NO. 6 SOLID COPPER (GREEN)
24	24	FIBER OPTIC CABLE IN CONDUIT NO. 62.5/125 2-MM12F SM12F
"P"	"P"	SIGNAL FACE WITH BACKPLATE. "P" INDICATES PROGRAMMED HEAD.
"E"		RAILROAD CONTROL CABINET
"E"		ILLUMINATED SIGN "NO LEFT TURN"
"E"		ILLUMINATED SIGN "NO RIGHT TURN"
H/C	C	GROUND ROD AT HANDHOLE (H), DOUBLE HANDHOLE (H), OR CONTROLLER (C)
P	P	GROUND ROD AT POST (P) OR MAST ARM POLE (MA)
S	S	GROUND ROD AT ELECTRIC SERVICE INSTALLATION
		ILLUMINATED STREET NAME SIGN
	10	EMERGENCY VEHICLE SYSTEM ANTENNA
		LUMINAIRE
	C	COAXIAL CABLE
UPS	UPS	UNINTERRUPTABLE POWER SUPPLY

I.D.O.T. TRAFFIC SIGNAL INSTALLATION ELECTRICAL SERVICE REQUIREMENTS					TOTAL WATTAGE
TYPE	NO. OF LAMPS	WATTAGE INCAND.	WATTAGE LED	x % OPERATION	
SIGNAL (RED)	23		17	0.50	195.50
(YELLOW)	23		25	0.25	143.75
(GREEN)	23		15	0.25	86.25
ARROW	12		12	0.10	14.40
PED. SIGNAL	10		25	1.00	250.00
CONTROLLER			100	1.00	100.00
ILLUM. SIGN			25	0.05	
ILLUM. ST NAME SIGN	4		60	0.50	
LUMINAIRE	4	250		0.50	120.00
FLASHER				0.50	500.00
ENERGY COSTS TO:				TOTAL =	1409.90

VILLAGE OF BOLINGBROOK

375 BRIARCLIFF ROAD
BOLINGBROOK, ILLINOIS 60440-0951

ENERGY SUPPLY: CONTACT: DALE BOLLINGER
PHONE: (815) 724-5717
COMPANY: COMED

FOUNDATION (DEPTH)	FT.	(m)	CABLE SLACK	FT.	(m)	VERTICAL	FT.	(m)
TYPE A - POST	4	(1.2)	HANDHOLE	6.5	(2.0)	ALL FOUNDATIONS	3.5	(1.0)
D - CONTROLLER	4	(1.2)	DOUBLE HANDHOLE	13	(4.0)	MAST ARM (L) POLE	20'+L-2=	
E - M. ARM POLE			SIGNAL POST	2	(1.0)		(6m+L-0.6m)=	
24" (600mm)	10	(3.0)	CONTROLLER CAB.	1	(0.5)	BRACKET MOUNTED	13	(4.0)
30" (750mm)	15	(4.6)	FIBER OPTIC	13	(4.0)	PED. PUSHBUTTON	4	(1.2)
36" (900mm)	15	(4.6)	ELECTRIC SERVICE	1	(0.5)	ELECTRIC SERVICE	13.5	(4.1)
			GROUND CABLE	1	(0.5)	SERVICE TO GROUND	13.5	(4.1)
						POST MOUNTED	6	(1.8)

NOTE:
PUSHBUTTON "A" SHALL PLACE A CALL IN PHASES 2 AND 4.
PUSHBUTTON "B" SHALL PLACE A CALL IN PHASES 4 AND 6.
PUSHBUTTON "C" SHALL PLACE A CALL IN PHASES 6 AND 8.
PUSHBUTTON "D" SHALL PLACE A CALL IN PHASES 2 AND 8.

SIGN (A)

LEFT ON GREEN ARROW ONLY

R10-5
24" x 30"
4-REQUIRED

NOTE:
THE TRAFFIC SIGNAL CONTROLLER EQUIPMENT FOR THIS PROJECT SHALL BE "ECONOLITE" TO MATCH THE EXISTING ADJACENT SYSTEM.

CONSTRUCTION NOTES:

1. REMOVE EXISTING CABINET AND CONTROLLER. INSTALL NEW CONTROLLER AND TYPE V CABINET ON EXISTING FOUNDATION, FIBER OPTIC TRANSCEIVER, AND TECH-POWER M-E SERIES UPS.
2. RELOCATE EXISTING EVP UNIT.
3. REPLACE SIGNS TO "LEFT ON GREEN ARROW ONLY" (4 REQUIRED).
4. FIBER OPTIC CABLE FROM WEBER ROAD AND LILY CACHE LANE TO BE TERMINATED IN THE SPLICE BOX BUT NOT CONNECTED TO THIS CONTROLLER.

REVISIONS	
NAME	DATE

ILLINOIS DEPARTMENT OF TRANSPORTATION

SCHEDULE OF QUANTITIES, CABLE PLAN AND PHASE DESIGNATION DIAGRAM

WEBER ROAD AND VETERANS PARKWAY
BOLINGBROOK, ILLINOIS

SCALE: N.T.S.
DATE: 4/7/2006
DRAWN BY: FCP/FPB
DESIGNED BY: MKW
CHECKED BY: MJT

CHRISTOPHER B. BURKE ENGINEERING LTD.
9575 West Higgins Road, Suite 600
Rosemont, Illinois 60018
(847) 823-0500

PROFILE | PLAN | SURVEYED | PLOTTED | BY | DATE

N:\BOLINGBROOK\05559\Traffic\CAB_Weber-Veterans.dgn