| ROUTE NO. | SECTION | COUNTY | TOTAL SHEETS | SHEET NO. |
|---|---|---|---|---|
| | * | WOODFORD | 17 | 4 |
| FED. ROAD DIST. NO. 7 | ILLINOIS | FED. AID PROJECT- | | |

* Section 02-08143-00-BR
CONTRACT NO. 89390

## BENCHMARK INFORMATION

B.M. "A" – SET RAILROAD SPIKE IN SECOND POWER POLE WEST OF BRIDGE ON NORTH SIDE OF ROAD. ELEV = 722.75

B.M. "B" – CHISELED "□" ON TOP OUTSIDE CORNER OF S.W. WINGWALL OF EXISTING STRUCTURE. ELEV = 721.45

B.M. "C" – SET RAILROAD SPIKE IN FIRST POWER POLE EAST OF BRIDGE ON NORTH SIDE OF ROAD. ELEV = 720.93

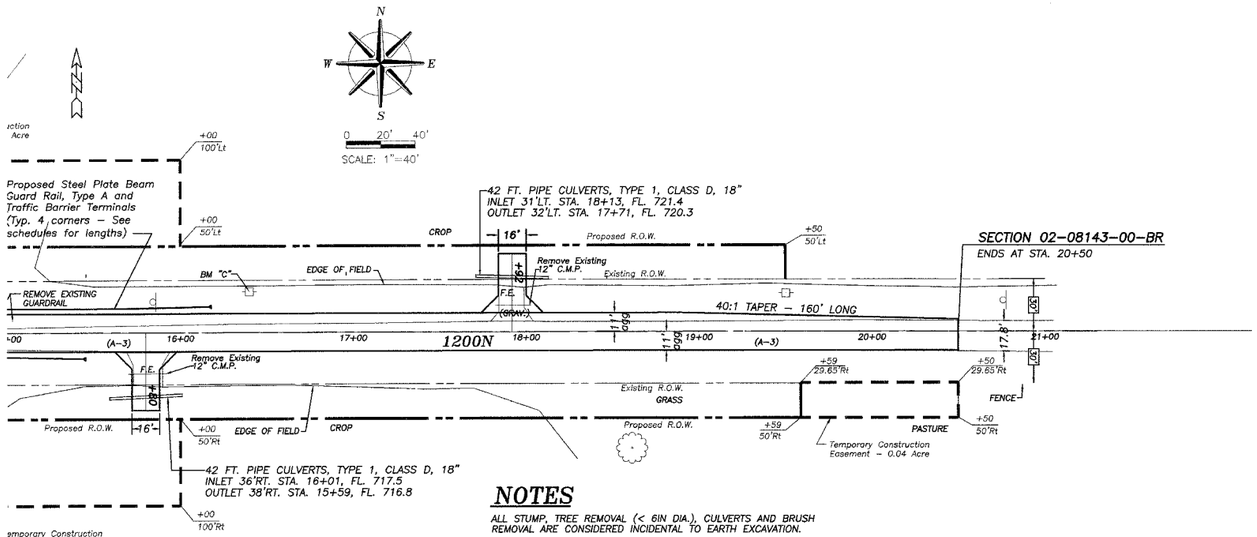


## NOTES

ALL STUMP, TREE REMOVAL (< 6IN DIA.), CULVERTS AND BRUSH REMOVAL ARE CONSIDERED INCIDENTAL TO EARTH EXCAVATION.

ALL FENCES DISTURBED BY CONSTRUCTION ACTIVITIES SHALL BE RELOCATED AND RESTORED BY THE CONTRACTOR AS DIRECTED BY BY THE ENGINEER.
(SEE SPECIAL PROVISIONS – COST CONSIDERED INCLUDED WITH PRICE BID FOR EARTH EXCAVATION)

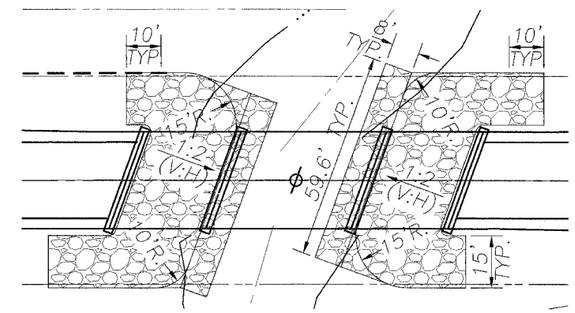


NOTE: LAYOUT OF THE SLOPE PROTECTION SYSTEM MAY BE VARIED TO SUIT GROUND CONDITIONS IN THE FIELD AS DIRECTED BY THE ENGINEER.

## SLOPE PROTECTION DETAIL

SCALE: 1"=20'

## UTILITIES

TELEPHONE: VERIZON
1–309–663–3140

CABLE: MEDIACOM
1–800–874–2991

POWER: AMEREN CILCO
300 LIBERTY ST.
PEORIA, IL
1–888–672–5252

THE LOCATIONS OF UTILITY FACILITIES AS SHOWN ON THESE PLANS ARE AN ESTIMATE AND NOT INTENDED AS FIELD LOCATIONS FOR CONSTRUCTION. THE CONTRACTOR IS RESPONSIBLE FOR CONTACTING ALL UTILITIES PRIOR TO CONSTRUCTION AND CALLING J.U.L.I.E. AT 800–892–0123 FOR CONFIRMATION OF EXISTING UTILITY LOCATIONS.

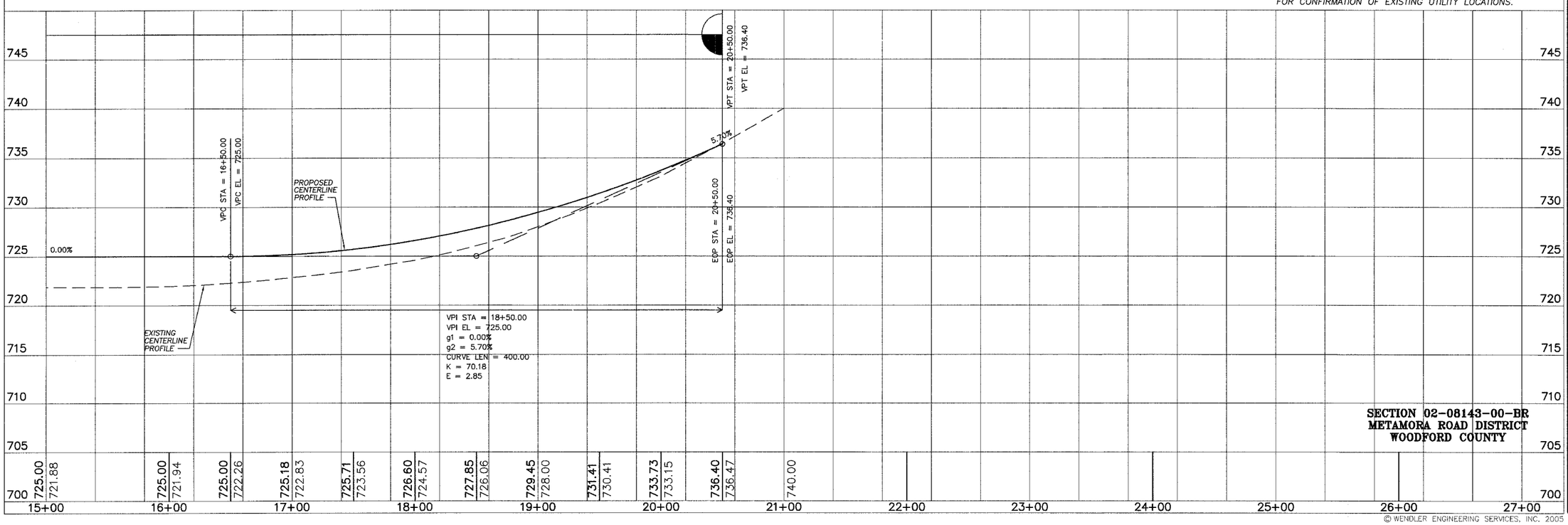


**SECTION 02-08143-00-BR**
**METAMORA ROAD DISTRICT**
**WOODFORD COUNTY**

© WENDLER ENGINEERING SERVICES, INC. 2005

DRAWING DATE 04/13/06

| REVISION | DATE | REVISION | DATE |
|---|---|---|---|
| | | | |


WENDLER ENGINEERING SERVICES, INC.
Structural & Civil Engineers–Land Surveying–Environmental Services
Illinois Professional Design Firm No. 184–000848
698 TIMBER CREEK ROAD – P.O. BOX 466 – DIXON, IL 61021 – 815–286–2261
29 E. MAIN, SUITE 3 – PRINCETON, IL 61356 – 815–879–7371
1778 WEST STATE ST. – SYCAMORE, IL 60178 – 815–895–5008
804 FREEPORT RD. – STERLING, IL 61081 – (815) 626–4428
E–MAIL: info@wendler.nu


1968 - 2005
AFTER 37 YEARS, WE'RE STILL "Turning Ideas... ...Into Reality!!"