CONTRACT NO. 97263

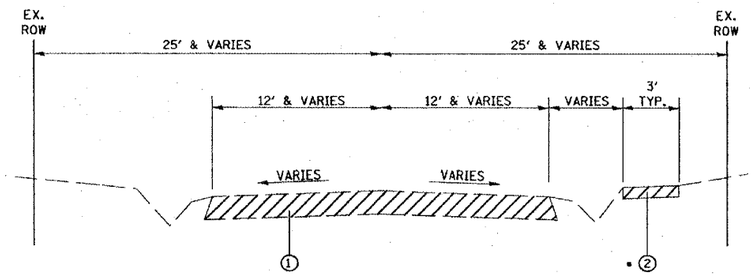

EXISTING TYPICAL SECTION SEIBERT ROAD

STA. 3+10.00 TO STA. 17+35.00

* STA. 4+32.63 TO STA. 7+15.86, STA. 8+09.00 TO STA. 8+20.00, STA. 11+72.24 TO STA. 17+35.00 (EXIST. 3' CONC. SIDEWALK BETWEEN STA. 8+20.00 AND STA. 11+11.45 TO REMAIN IN PLACE)

LEGEND

1. EXISTING OIL & CHIP ROADWAY - TO BE REMOVED
2. EXISTING CONCRETE SIDEWALK - TO BE REMOVED
3. PROPOSED COMBINATION CURB & GUTTER, TYPE B-6.24
4. PROPOSED BITUMINOUS CONCRETE SURFACE COURSE SUPERPAVE, MIX "D" N70 - 2"
5. PROPOSED BITUMINOUS CONCRETE BINDER COURSE SUPERPAVE, IL 19.0, N70 - 7.75"
6. PROPOSED PROCESSING MODIFIED SOIL - 12"
7. PROPOSED PORTLAND CEMENT CONCRETE SIDEWALK
8. PROPOSED BITUMINOUS MATERIALS (PRIME COAT)
9. PROPOSED AGGREGATE (PRIME COAT)
10. PROPOSED AGGREGATE BASE COURSE, TYPE A - 6"
11. PROPOSED SEGMENTAL CONCRETE BLOCK WALL
12. PROPOSED CONCRETE SURFACE COURSE SUPERPAVE, IL 9.5L (LOW ESAL)
13. PROPOSED STORM SEWER (12" & 18" RCP)
14. PROPOSED PAVEMENT MARKING

INDICATES REMOVAL ITEM

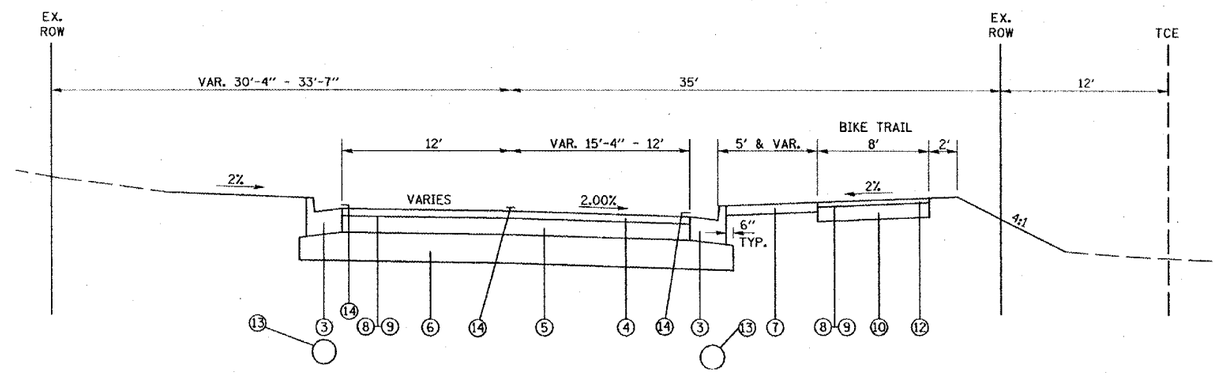

PROPOSED TYPICAL SECTION SEIBERT ROAD

STA. 3+10.00 TO STA. 3+63.01

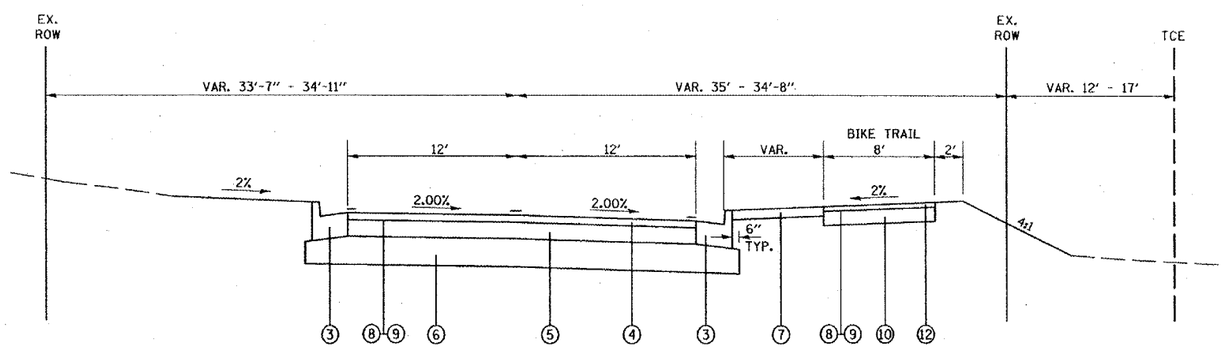

PROPOSED TYPICAL SECTION SEIBERT ROAD

STA. 3+63.01 TO STA. 3+76.54

THOUVENOT, WADE & MOERCHEN, INC.
ENGINEERS ◆ SURVEYORS ◆ PLANNERS

[X] CORPORATE OFFICE
4940 OLD COLLINSVILLE RD.
SWANSEA, ILLINOIS 62226
TEL (618) 624-4488
FAX (618) 624-6688
corp@twm-inc.com

[ ] WATERLOO OFFICE
113 SOUTH MAIN STREET
WATERLOO, ILLINOIS 62298
TEL (618) 939-5050
FAX (618) 939-3938
waterloo@twm-inc.com

[ ] ST. LOUIS OFFICE
1001 CRAIG ROAD, SUITE 260
ST. LOUIS, MISSOURI 63146
TEL (314) 236-5052
FAX (314) 872-2194
stlouis@twm-inc.com

PROFESSIONAL REGISTRATIONS	LICENSE NO.
ILLINOIS PROFESSIONAL DESIGN FIRM	184-001220
PROFESSIONAL ENGINEERING CORP.	62-035370
PROFESSIONAL STRUCTURAL ENGR. CORP.	81-005202
ILLINOIS PROF. LAND SURVEYING CORP.	048-000029
MISSOURI PROFESSIONAL ENGR. CORP.	NC 001528
MISSOURI LAND SURVEYING CORP.	NC 000346

SEAL

Renewal Date:
Signature Date:

STATEMENT OF RESPONSIBILITY

I hereby confirm that the document herein to be authenticated by my seal is restricted to this sheet, and I hereby disclaim any responsibility for all other drawings, specifications, estimates, reports or other documents or instruments relating to or intended to be utilized for any other part of the architectural, engineering or survey project.

TITLE: EXISTING AND PROPOSED TYPICAL SECTIONS

PROJECT: SEIBERT RD RECONSTRUCTION VILLAGE OF SHILOH ST.CLAIR COUNTY, ILLINOIS

REV.	DATE	DESCRIPTION
△	/ /	
△	/ /	

DRAWN BY:	SHEET
DESIGNED BY:	5
CHECKED BY:	
APPROVED BY:	
PROJECT NUMBER	OF 40 SHEETS

[X] ISSUED FOR REVIEW [ ] ISSUED FOR BIDDING
[ ] ISSUED FOR CONSTR. [ ] RECORD DRAWING

PLAN | SURVEYED | PLOTTED | ROADWAY CHECKED | R.O.W. CHECKED | CADD FILE NAME | NOTE BOOK NO. | BY | DATE

PROFILE | SURVEYED | PLOTTED | PROFILE CHECKED | E.M. NO. | STRUC. JOB NO. | NOTATIONS CHKD | NOTE BOOK NO. | BY | DATE

$TIME$
$FILE$ $DATE$