F.A.U. RTE.	SECTION	COUNTY	TOTAL SHEETS	SHEET NO.
1587	2004-042 RS	COOK	25	5
STA. N/A		TO STA. N/A		
FED. ROAD DIST. NO. 1	ILLINOIS	FED. AID PROJECT		

CONTRACT NO. 62677

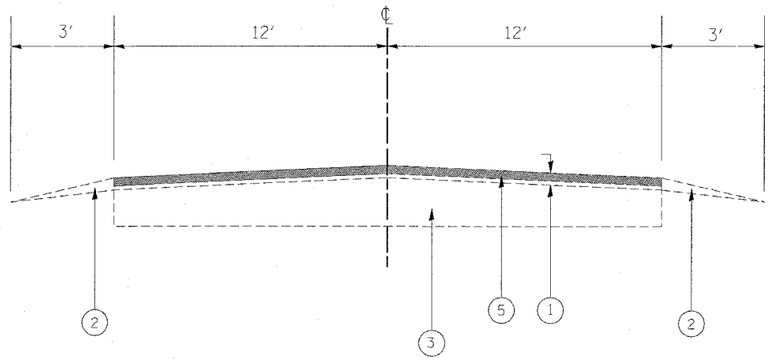

EXISTING TYPICAL CROSS SECTION
123rd / 127th STREET
STA. 0+00 TO STA. 15+47
STA. 24+20 TO STA. 45+25

LEGEND

1. EXISTING BIT. CONC. SURFACE COURSE, ± 8″
2. EXISTING BIT. AGGREGATE SHOULDER, 3′
3. EXISTING SUBBASE GRANULAR MATERIAL, 7″
4. PROPOSED AGGREGATE SHOULDER, TYPE B, 3′
5. PROPOSED BIT. SURFACE REMOVAL (2¼″)
6. PROPOSED BIT. CONC. SURFACE COURSE, SUPERPAVE MIX "D", N70 (1½″)
7. PROPOSED POLYMERIZED LEVELING BINDER (MACHINE METHOD), SUPERPAVE, IL-4.75, N50 (3/4″)

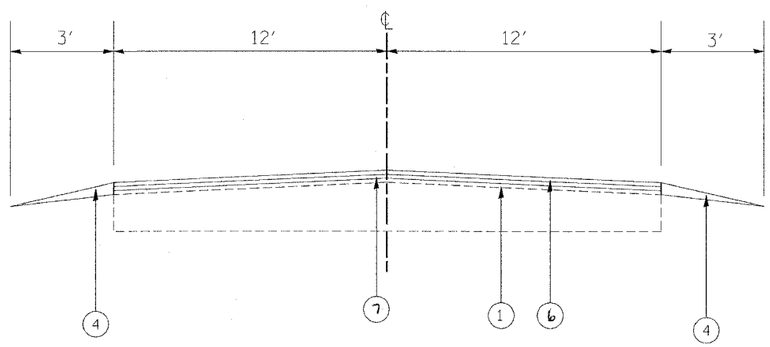

PROPOSED TYPICAL CROSS SECTION
123rd / 127th STREET
STA. 0+00 TO STA. 15+47
STA. 24+20 TO STA. 45+25

DETAIL: PROPOSED AGGREGATE
SHOULDER TYPE B

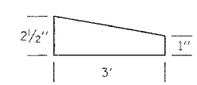

REVISIONS	
NAME	DATE

ILLINOIS DEPARTMENT OF TRANSPORTATION

LOCATION #2
123RD ST./127TH ST.
EXISTING AND PROPOSED
TYPICAL SECTION

SCALE : NONE
3/31/2005

DRAWN BY: MHO
CHECKED BY: IR

3/31/2005
c:\projects\d105004\d105004aa.m32
abudanj