F.A.I. RTE.	SECTION	COUNTY	TOTAL SHEETS	SHEET NO.
94	*	COOK	860	625
STA. 2200+00.00	TO STA. 2362+00.00			
FED. ROAD DIST. NO.	ILLINOIS	FED. AID PROJECT		

* (1516.1, 1717 & 1818) R-8

62694

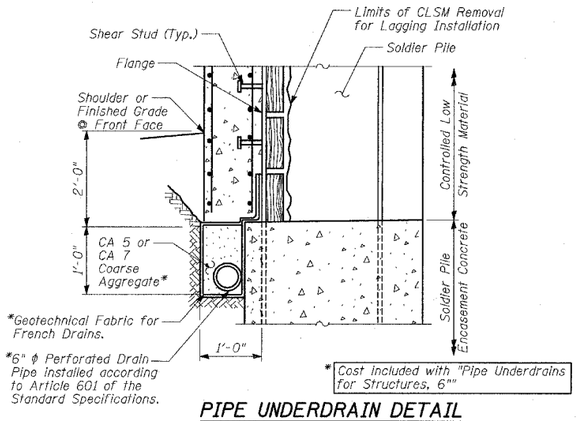

PIPE UNDERDRAIN DETAIL AT SOLDIER PILE

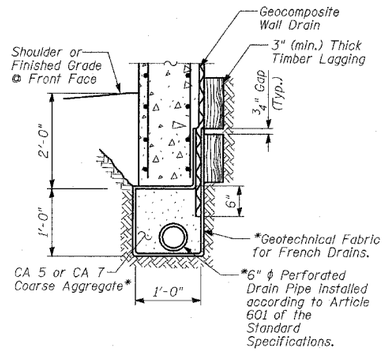

PIPE UNDERDRAIN DETAIL BETWEEN SOLDIER PILES

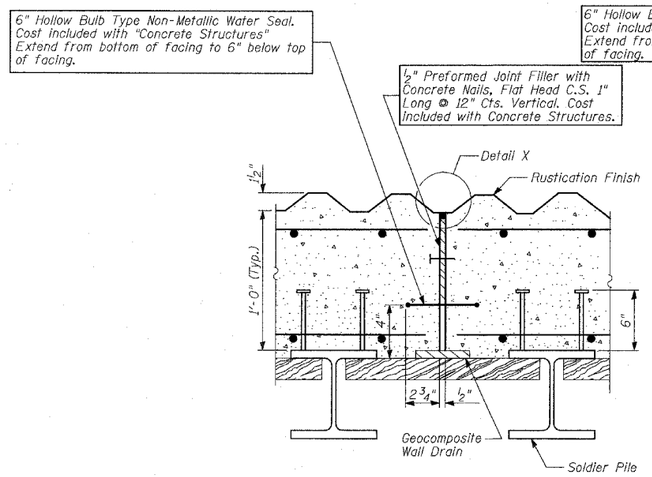

EXPANSION JOINT DETAILS
(Joint in Valley)

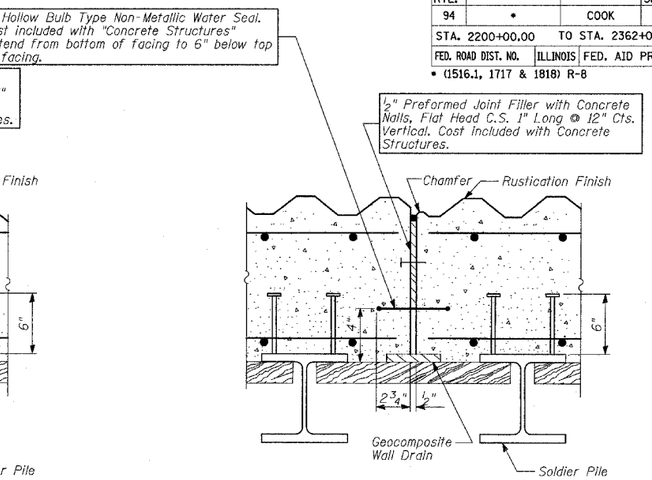

EXPANSION JOINT DETAILS
(Joint on Diagonal)

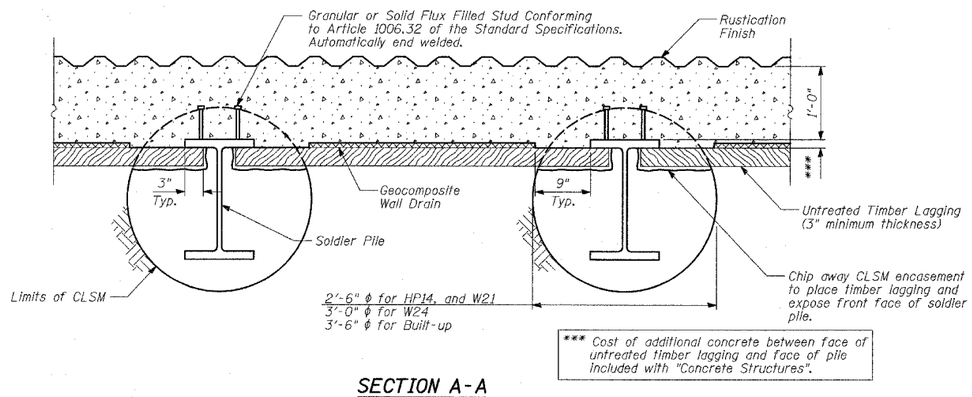

SECTION A-A

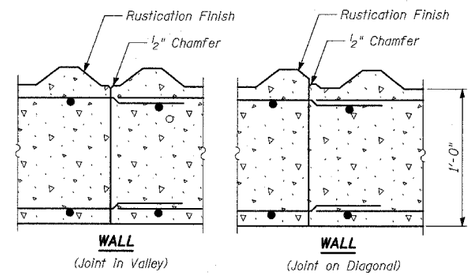

CONSTRUCTION JOINT DETAILS

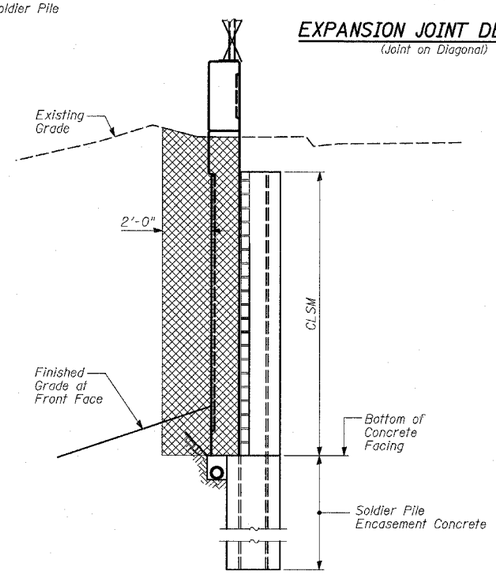

STRUCTURE EXCAVATION

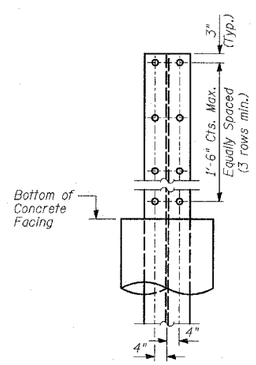

STUD SHEAR CONNECTOR DETAIL

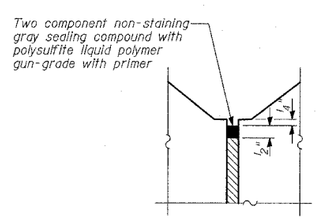

DETAIL X

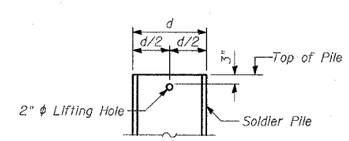

LIFTING HOLE DETAIL

NOTES:

1. For Notes, See Sheet 20 of 36.
2. For HSS 12x6x1/4 Lagging, See Sheet 3 of 36.

BILL OF MATERIAL

ITEM	UNIT	TOTAL
Structure Excavation	CU YD	1,030
Stud Shear Connectors	EACH	1,448
Untreated Timber Lagging	SQ FT	6,452
Geocomposite Wall Drain	SQ YD	789
Pipe Underdrains for Structures, 6"	FOOT	1,170
Furnishing and Erecting Structural Steel	POUND	1,800

LEGEND

Structure Excavation

TY·LIN INTERNATIONAL

SHEET 21 OF 36

REVISIONS	
NAME	DATE
REVISED	04/15/05

ILLINOIS DEPARTMENT OF TRANSPORTATION

F.A.I. 94 (DAN RYAN EXPRESSWAY)
RETAINING WALL ALONG STATE ST.
77TH ST. TO 78TH ST.
WALL 70
WALL DETAILS

S.N. 016-W976 | DESIGNED BY: MI, DJR
SCALE: N.T.S. | DRAWN BY: DJR
DATE: MARCH 18, 2005 | CHECKED BY: TD, MI

©DATE