F.A.U. RTE.	SECTION	COUNTY	TOTAL SHEETS	SHEET NO.
1332	2004-022TS	COOK	20	13
STA.		TO STA.		
FED. ROAD DIST. NO.	ILLINOIS	FED. AID PROJECT		

CONTRACT NO. 62741

CONTROLLER SEQUENCE

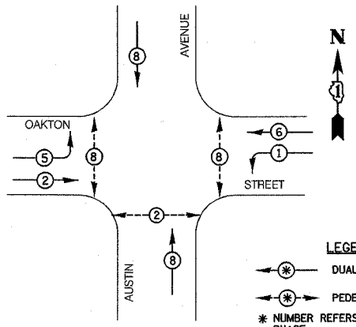

LEGEND

- DUAL ENTRY PHASE
- PEDESTRIAN PHASE
- ✱ NUMBER REFERS TO ASSOCIATED PHASE

PHASE DESIGNATION DIAGRAM

EMERGENCY VEHICLE PREEMPTION SEQUENCE

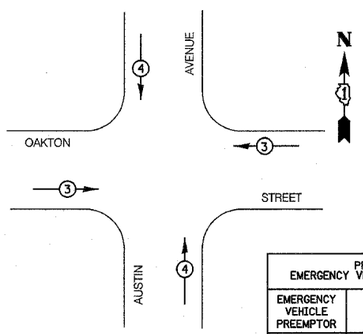

PROPOSED EMERGENCY VEHICLE PREEMPTORS		
EMERGENCY VEHICLE PREEMPTOR	3	4
MOVEMENT	← →	↑ ↓

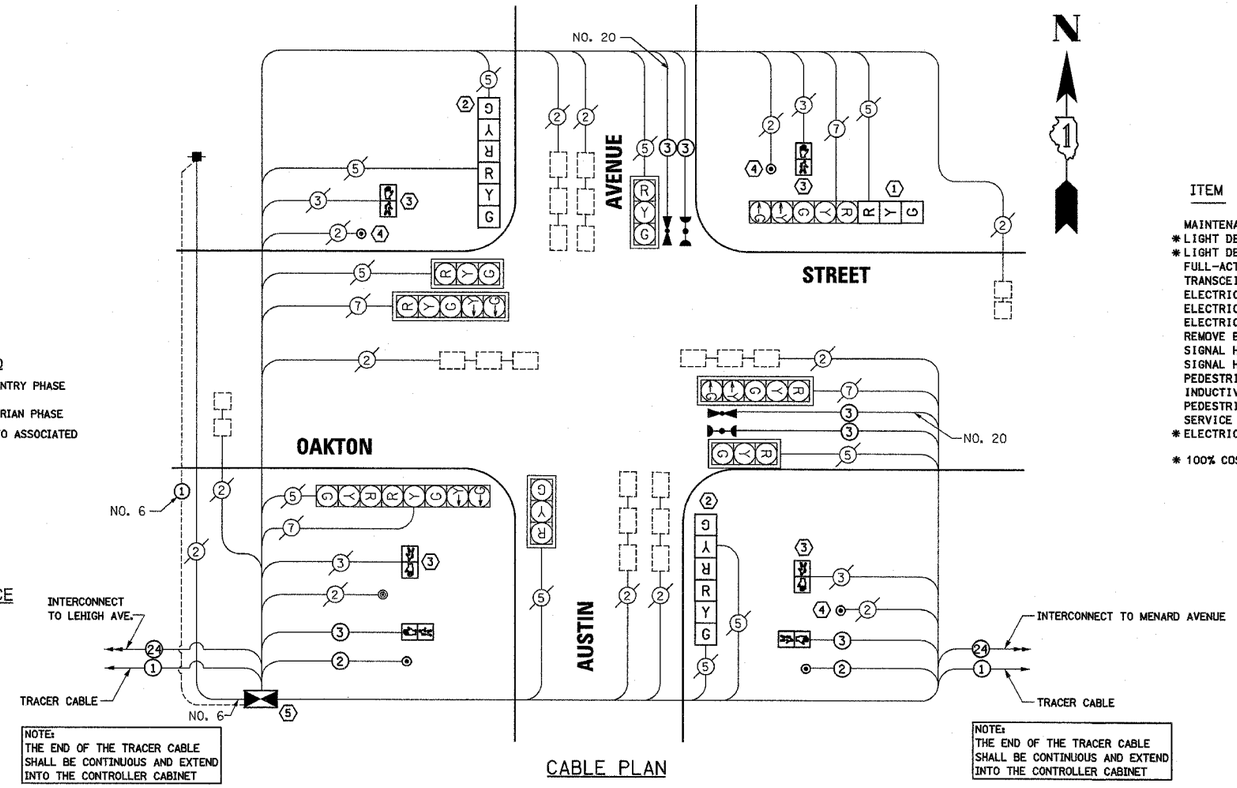

NOTE:
THE END OF THE TRACER CABLE SHALL BE CONTINUOUS AND EXTEND INTO THE CONTROLLER CABINET

NOTE:
THE END OF THE TRACER CABLE SHALL BE CONTINUOUS AND EXTEND INTO THE CONTROLLER CABINET

CABLE PLAN

SCHEDULE OF QUANTITIES

ITEM	UNIT	QUANTITY
MAINTENANCE OF EXISTING TRAFFIC SIGNAL INSTALLATION	EACH	1
✱ LIGHT DETECTOR	EACH	2
✱ LIGHT DETECTOR AMPLIFIER	EACH	1
FULL-ACTUATED CONTROLLER AND TYPE IV CABINET	EACH	1
TRANSCEIVER-FIBER OPTIC	EACH	1
ELECTRIC CABLE IN CONDUIT, SIGNAL, NO. 14 2C	FOOT	245
ELECTRIC CABLE IN CONDUIT, SIGNAL, NO. 14 3C	FOOT	687
ELECTRIC CABLE IN CONDUIT, GROUNDING, NO. 6 1C	FOOT	216
REMOVE EXISTING TRAFFIC SIGNAL EQUIPMENT	EACH	1
SIGNAL HEAD, 1-FACE, 3-SECTION, BRACKET MOUNTED	EACH	1
SIGNAL HEAD, 2-FACE, 3-SECTION, BRACKET MOUNTED	EACH	2
PEDESTRIAN SIGNAL HEAD, LED, 1-FACE, BRACKET MOUNTED	EACH	6
INDUCTIVE LOOP DETECTOR	EACH	8
PEDESTRIAN PUSH-BUTTON	EACH	5
SERVICE INSTALLATION, POLE MOUNTED	EACH	1
✱ ELECTRIC CABLE IN CONDUIT, NO. 20 3/C, TWISTED, SHIELDED	FOOT	422

✱ 100% COST TO VILLAGE OF MORTON GROVE

CABLE PLAN LEGEND

EXISTING	PROPOSED	
		8" (200mm) TRAFFIC SIGNAL SECTION
		12" (300mm) TRAFFIC SIGNAL SECTION
		12" (300mm) PEDESTRIAN SIGNAL SECTION
		12" (300mm) PEDESTRIAN SIGNAL SECTION
		CONTROLLER CABINET
		SERVICE INSTALLATION
		TELEPHONE CONNECTION
		VEHICLE DETECTOR, INDUCTION LOOP
		MAGNETIC DETECTOR
		EMERGENCY VEHICLE LIGHT DETECTOR
		CONFIRMATION BEACON
		PUSHBUTTON DETECTOR
		DENOTES NUMBER OF CONDUCTORS, ALL CABLE NO. 14 EXCEPT AS INDICATED. ALL LOOP DETECTOR CABLE TO BE SHIELDED.

EXISTING	PROPOSED	
		GROUND CABLE IN CONDUIT NO. 6 SOLID COPPER (GREEN)
		FIBER OPTIC CABLE IN CONDUIT NO. 62.5/125 MM12F SM12F
		SIGNAL FACE WITH BACKPLATE, "P" INDICATES PROGRAMMED HEAD
"E"		RAILROAD CONTROL CABINET
"E"		ILLUMINATED SIGN "NO LEFT TURN"
"E"		ILLUMINATED SIGN "NO RIGHT TURN"
H/C	C	GROUND ROD AT HANDHOLE (H), DOUBLE HANDHOLE (H), OR CONTROLLER (C).
P	P	GROUND ROD AT POST (P), OR MAST ARM POLE (MA).
S	S	GROUND ROD AT ELECTRIC SERVICE INSTALLATION
		MICROWAVE VEHICLE SENSOR

CONSTRUCTION NOTES:

1. REMOVE EXISTING 8" SIGNAL HEAD, 1-FACE, 3-SECTION, BRACKET MOUNTED, INSTALL NEW 12" SIGNAL HEAD, 1-FACE, 3-SECTION, BRACKET MOUNTED.
2. REMOVE EXISTING 8" SIGNAL HEAD, 2-FACE, 3-SECTION, BRACKET MOUNTED, AND INSTALL NEW 12" SIGNAL HEAD, 2-FACE, 3-SECTION, BRACKET MOUNTED.
3. REMOVE EXISTING PEDESTRIAN SIGNAL HEAD, 1-FACE, BRACKET MOUNTED, AND INSTALL NEW LED PEDESTRIAN SIGNAL HEAD, 1-FACE, BRACKET MOUNTED.
4. REMOVE EXISTING PEDESTRIAN PUSH-BUTTON. INSTALL NEW PEDESTRIAN PUSH-BUTTON.
5. REMOVE EXISTING CONTROLLER AND CABINET, INSTALL NEW CONTROLLER AND TYPE IV CABINET, RE-USE EXISTING FOUNDATION.
6. THE CONTRACTOR SHALL BE REQUIRED TO MAINTAIN THE OPERATION OF THE TRAFFIC SIGNALS DURING THE ENTIRE PROJECT.

I.D.O.T. TRAFFIC SIGNAL INSTALLATION ELECTRICAL SERVICE REQUIREMENTS					TOTAL WATTAGE
TYPE	NO. LAMPS X	WATTAGE INCAND.	LED	X % OPERATION	
SIGNAL (RED)	14	135		0.50	945.0
(YELLOW)	14	135		0.25	472.5
(GREEN)	14	135		0.25	472.5
ARROW	8	135		0.10	108.0
PED. SIGNAL	6	90	25	1.00	150.0
CONTROLLER	1	100		1.00	100.0
				TOTAL =	2248.0

ENERGY COSTS - BILLED TO: VILLAGE OF MORTON GROVE
(ADDRESS) 6101 CAPULINA AVENUE
MORTON GROVE, IL 60053

ENERGY SUPPLY - CONTACT: MR. MIKE LYNCH
PHONE: (847) 816-5331
COMPANY: COMED

FOUNDATION (DEPTH)	(FT.) (m)
TYPE A - POST	4 (1.2)
D - FOUNDATION	4 (1.2)
C - M. ARM POLE	
24" (600mm)	10 (3.0)
30" (750mm)	15 (4.6)

CABLE SLACK	(FT.) (m)
HANDHOLE	6.5 (2.0)
DOUBLE HANDHOLE	13 (4.0)
SIGNAL POST	2 (1.0)
CONTROLLER CAB.	1 (0.5)
FIBER OPTIC	13 (4.0)
ELECTRIC SERVICE	1 (0.5)
GROUND CABLE	1 (0.5)

VERTICAL	(FT.) (m)
ALL FOUNDATIONS	3.5 (1.0)
MAST ARM (L) POLE	20' + L - 2 = (6m+L-0.6m)=
BRACKET MOUNTED	13 (4.0)
PED. PUSHBUTTON	4 (1.2)
ELECTRIC SERVICE	13.5 (4.1)
SERVICE TO GROUND	13.5 (4.1)
POST MOUNTED	6 (1.8)

SELTON ENGINEERING
SERVICE CORPORATION
CIVIL ENGINEERS
19 S. BOTHWELL STREET
PALATINE, ILLINOIS 60067
VOICE: 847-776-7200 FAX: 847-776-7239
SELTON PROJECT # 2002006-001-006

REVISIONS NAME	DATE

ILLINOIS DEPARTMENT OF TRANSPORTATION

CABLE PLAN, PHASE DESIGNATION DIAGRAM AND SCHEDULE OF QUANTITIES
OAKTON STREET AT AUSTIN AVENUE
MORTON GROVE, ILLINOIS

SCALE: N.T.S.
DATE 09-20-2004

DRAWN BY BR
DESIGNED BY VO
CHECKED BY TJM